Vector inverter for lifts with synchronous/asynchronous motors

SIEIDrive

ADL300

.... Quick start up guide

Specification and installation

GEFRAN

Information about this manual

The ADL300 Quick start guide is a handy-sized manual for mechanical installation, electrical connection and fast start-up.
The manual explaining the functions and a description of the parameters can be found on the CD provided with the drive.

Software version
This manual is updated according the software version V 4.0.0 .
The identification number of the software version is indicated on the identification plate of the drive or can be checked with the **Firmware ver.rel** - PAR 490 parameter, menu 2.6.

General information

Note ! In industry, the terms “Inverter”, “Regulator” and “Drive” are sometimes interchanged. In this document, the term “Drive” will be used.

Before using the product, read the safety instruction section carefully. Keep the manual in a safe place and available to engineering and installation personnel during the product functioning period.
Gefran S.p.A has the right to modify products, data and dimensions without notice. The data can only be used for the product description and they can not be understood as legally stated properties.

Thank you for choosing this Gefran product.
We will be glad to receive any possible information which could help us improvingthis manual. The e-mail address is the following: techdoc@gefran.com.
All rights reserved

Table of Contents

Information about this manual 2

1 - Safety Precautions 5
1.1 Symbols used in the manual 5
1.2 Safety precaution 5
1.3 General warnings 6
1.4 Instruction for compliance with UL Mark (UL requirements), U.S. and Canadian electrical codes 7

2 - Introduction to the product 8
2.1 Dedicated features 8
2.2 Other features 9
2.3 Identification of components 10
2.4 Product identification 11
2.5 Standard configurations 12

3 - Transport and storage 15
3.1 General 15
3.2 Permissible Environmental Conditions 15

4 - Specification 16
4.1 Environmental Conditions 16
4.2 Standards 16
4.3 Precision 16
4.3.1 Speed control 16
4.3.2 Speed control limits 16
4.3.3 Torque control 16
4.3.4 Current rating 16
4.4 Input electrical data 17
4.5 Output electrical data 18
4.5.1 Derating values in overload condition 19
4.5.2 Derating values for switching frequency 19
4.5.3 Kalt: Ambient temperature reduction factor 19
4.6 Voltage level of the inverter for safe operations 20
4.7 No-load consumption (Energy rating) 20
4.8 Cooling 21
4.9 Weights and dimensions 22

5 - Options 25
5.1 Optional external fuses 25
5.1.1 Network side fuses (F1) 25
5.2 Input chokes 26
5.2.1 AC input chokes 26
5.2.2 DC input chokes 26
5.3 AC output chokes 27
5.4 External braking resistors (optional) 28
5.5 EMC Filter (optional) 29

6 - Mechanical installation 30
6.1 Maximum inclination and assembly clearances 30
6.2 Fastening positions 31

7 - Wiring Procedure 33
7.1 Power section 35
7.1.1 Cable cross-sections 35
7.1.2 Connection of shielding (recommended) 36
7.1.3 EMC guide line 37
7.1.4 Block diagram of power section 38
7.1.5 Internal EMC filter (standard) 39
7.1.6 Power line connection 39
7.1.7 Connection of AC and DC chokes (optional) 39
7.1.8 Motor connection 40
7.1.9 Connection of braking resistor (optional) 40
7.2 Regulation section 41
7.2.1 Cable cross-sections 42
7.2.2 Connection of I/O card 42
7.2.3 Feedback Connection 44
7.2.4 Integrated Safety Card Connection 51
7.3 Connection diagrams 52
7.3.1 Regulation potentials, digital I/O 52

7.3.2 Typical connection diagram 53
7.3.3 Emergency connection diagram (with UPS or EMS module) 55
7.3.4 Connection diagram for emergency maneuver (for synchronous motor only). 60
7.4 Serial interface (PC connector) 61
7.4.1 Drive/RS232 port point-to-point connection 61
7.5 CAN interface 62
7.6 Optional Keypad interface (keypad connector) 63
7.7 Saving data on the Memory Card 63
7.8 Braking 64
7.8.1 Braking unit (internal) 64

8. Use of the keypad 66
8.1 Description of keypads 66
8.1.1 KB-ADL300 integrated keypad 66
8.1.1.1 Membrane keypad 66
8.1.1.2 Meaning of LEDs 66
8.1.2 KB-ADL optional programming keypad 67
8.1.2.1 Membrane keypad 67
8.1.2.2 Meaning of LEDs 67
8.2 Navigating with the integrated keypad 68
8.2.1 Scanning of first and second level menus 68
8.2.2 Display 68
8.2.3 Changing values 70
8.2.4 Error messages when modifying a parameter 71
8.2.5 Displaying and closing Messages 71
8.2.6 Displaying and resetting Alarms 72
8.2.6.1 Alarm Log 72
8.2.7 Startup wizard 72
8.2.8 Motor self-tuning 73
8.2.9 Asynchronous/Synchronous selection 73
8.2.10 Correspondence table displayed character/alphabet 73
8.3 Navigating with the optional keypad 74
8.3.1 Scanning of the first and second level menus 74
8.3.2 Display of a parameter 74
8.3.3 Scanning of the parameters 75
8.3.4 List of the last parameters modified 75
8.3.5 "FIND" function 75
8.3.6 Parameter modification 75
8.3.7 How to save parameters 76
8.3.8 Configuration of the display 77
8.3.8.1 Language selection 77
8.3.8.2 Selection of Easy/Expert mode 77
8.3.9 Startup display 77
8.3.10 Back-lighting of the display 77
8.3.11 Alarms 77
8.3.11.1 Alarm reset 77
8.3.12 Messages 78
8.3.13 Saving and recovery of new parameter settings 78
8.3.13.1 Selection of the keypad memory 78
8.3.13.2 Saving of parameters on the keypad 78
8.3.13.3 Load parameters from keypad 79
8.3.13.4 Transfer of parameters between drives 79
8.3.14 Saving and recovery of new parameter settings on memory card 79
8.3.15 Asynchronous/Synchronous selection 80

9 - Commissioning via keypad 81
9.1 Asynchronous motor startup wizard (with the integrated keypad) 83
9.1 Asynchronous motor startup wizard (with the optional keypad) 88
9.2 Startup wizard for brushless motors (with the integrated keypad) 95
9.2 Startup wizard for brushless motors (with the optional keypad) 100

10 - Troubleshooting 107
10.1 Alarms 107
10.2 Speed fbk loss alarm according to the type of feedback 111
10.2.1 Reset Speed fbk loss alarm 113
10.2.2 Encoder error alarm 113
10.3 Messages 114

Appendix 117
A.1 - ADL300 Advanced Configuration 117
A.1.1 - Inserting expansion cards 118
A.2 - I/O Card 119
A.2.1 Input/Output features 122
A.3 Encoders and encoder expansion cards 125
A.3.1 Encoders 125
A.3.2 Phasing 126
A.3.3 Encoder cards 127
A.4 - Brake monitoring system (A3 Amendment) 138
A.4.1 Introduction 138
A.4.2 Configuration of the brake fault alarm 139
A.4.3 Maintenance of the brake fault alarm function 139
A.4.4 Troubleshooting 139

1 - Safety Precautions

1.1 Symbols used in the manual

Warning!

Indicates a procedure, condition, or statement that, if not strictly observed, could result in personal injury or death.

Indique le mode d'utilisation, la procédure et la condition d'exploitation. Si ces consignes ne sont passtrictement respectées, il y a des risques de blessures corporelles ou de mort.

Caution

Indicates a procedure, condition, or statement that, if not strictly observed, could result in damage to or destruction of equipment.

Indique le mode d'utilisation, la procédure et la condition d'exploitation. Si ces consignes ne sont pas strictement respectées, il y a des risques de détérioration ou de destruction des appareils.

Indicates that the presence of electrostatic discharge could damage the appliance. When handling the boards, always wear a grounded bracelet.

Indique que la présence de décharges électrostatiques est susceptible d'endommager l'appareil. Toujours porter un bracelet de mise à la terre lors de la manipulation des cartes.

Attention

Indicates a procedure, condition, or statement that should be strictly followed in order to optimize these applications.

Indique le mode d'utilisation, la procédure et la condition d'exploitation. Ces consignes doivent êtrerigoureusement respectées pour optimiser ces applications.

Note !

Indicates an essential or important procedure, condition, or statement.

Indique un mode d'utilisation, de procédure et de condition d'exploitation essentiels ou importants

Qualified personnel

For the purpose of this Instruction Manual , a "Qualified person" is someone who is skilled to the installation, mounting, start-up and operation of the equipment and the hazards involved. This operator must have the following qualifications:

- trained in rendering first aid.
- trained in the proper care and use of protective equipment in accordance with established safety procedures.
- trained and authorized to energize, de-energize, clear, ground and tag circuits and equipment in accordance with established safety procedures.

Personne qualifiée

Aux fins de ce manuel d'instructions, le terme « personne qualifiée » désigne toute personne compétente en matière d'installation, de montage, de mise en service et de fonctionnement de l'appareil et au fait des dangers qui s'y rattachent. L'opérateur en question doit posséder les qualifications suivantes :

- *formation lui permettant de dispenser les premiers soins*
- *formation liée à l'entretien et à l'utilisation des équipements de protection selon les consigne de sécurité en vigueur*
- *formation et habilitation aux manoeuvres suivantes : branchement, débranchement, vérification des isolations, mise à la terre et étiquetage des circuits et des appareils selon les consignes de sécurité en vigueur*

Use for intended purpose only

The power drive system (electrical drive + application plant) may be used only for the application stated in the manual and only together with devices and components recommended and authorized by Gefran.

Utiliser uniquement dans les conditions prévues

Le système d'actionnement électrique (drive électrique + installation) ne peut être utilisé que dans les conditions d'exploitation et les lieux prévus dans le manuel et uniquement avec les dispositifs et les composants recommandés et autorisés par Gefran.

1.2 Safety precaution

The following instructions are provided for your safety and as a means of preventing damage to the product or components in the machines connected. This section lists instructions, which apply generally when handling electrical drives.

Specific instructions that apply to particular actions are listed at the beginning of each chapters.
Les instructions suivantes sont fournies pour la sécurité de l'utilisateur tout comme pour éviter l'endommagement du produit ou des composants à l'intérieur des machines raccordées. Ce paragraphe dresse la liste des instructions généralement applicables lors de la manipulation des drives électriques.
Les instructions spécifiques ayant trait à des actions particulières sont répertoriées au début de chaque chapitre.

Read the information carefully, since it is provided for your personal safety and will also help prolong the service life of your electrical drive and the plant you connect to it.
Lire attentivement les informations en matière de sécurité personnelle et visant par ailleurs à prolonger la durée de vie utile du drive tout comme de l'installation à laquelle il est relié.

1.3 General warnings

This equipment contains dangerous voltages and controls potentially dangerous rotating mechanical parts. Non-compliance with Warnings or failure to follow the instructions contained in this manual can result in loss of life, severe personal injury or serious damage to property.

Cet appareil utilise des tensions dangereuses et contrôle des organes mécaniques en mouvement potentiellement dangereux. L'absence de mise en pratique des consignes ou le non-respect des instructions contenues dans ce manuel peuvent provoquer le décès, des lésions corporelles graves ou de sérieux dégâts aux équipements.

Only suitable qualified personnel should work on this equipment, and only after becoming familiar with all safety notices, installation, operation and maintenance procedures contained in this manual. The successful and safe operation of this equipment is dependent upon its proper handling,installation, operation and maintenance.

Seul un personnel dûment formé peut intervenir sur cet appareil et uniquement après avoir assimilé l'ensemble des informations concernant la sécurité, les procédures d'installation, le fonctionnement et l'entretien contenues dans ce manuel. La sécurité et l'efficacité du fonctionnement de cet appareil dépendent du bon accomplissement des opérations de manutention, d'installation, de fonctionnement et d'entretien.

In the case of faults, the drive, even if disabled, may cause accidental movements if it has not been disconnected from the mains supply.

En cas de panne et même désactivé, le drive peut provoquer des mouvements fortuits s'il n'a pas été débranché de l'alimentation secteur.

Electrical Shock

The DC link capacitors remain charged at a hazardous voltage even after cutting off the power supply.

Never open the device or covers while the AC Input power supply is switched on. Minimum time to wait before working on the terminals or inside the device is listed in section 4.6.

Risque de décharge électrique

Les condensateurs de la liaison à courant continu restent chargés à une tension dangereuse même après que la tension d'alimentation a été coupée.

Ne jamais ouvrir l'appareil lorsqu'il est suns tension. Le temps minimum d'attente avant de pouvoir travailler sur les bornes ou bien àl'intérieur de l'appareil est indiqué dans la section 4.6.

Electrical Shock and Burn Hazard:

When using instruments such as oscilloscopes to work on live equipment, the oscilloscope's chassis should be grounded and a differential probe input should be used. Care should be used in the selection of probes and leads and in the adjustment of the oscilloscope so that accurate readings may be made. See instrument manufacturer's instruction book for proper operation and adjustments to the instrument.

Décharge Èlectrique et Risque de Brúlure : Lors de l'utilisation d'instruments (par example oscilloscope) sur des systémes en marche, le chassis de l'oscilloscope doit être relié à la terre et une sonde différentiel devrait être utilisé en entrée. Les sondes et conducteurs doivent être choissis avec soin pour effectuer les meilleures mesures à l'aide d'un oscilloscope. Voir le manuel d'instruction pour une utilisation correcte des instruments.

Fire and Explosion Hazard:

Fires or explosions might result from mounting Drives in hazardous areas such as locations where flammable or combustible vapors or dusts are present. Drives should be installed away from hazardous areas, even if used with motors suitable for use in these locations.

Risque d'incendies et d'explosions: L'utilisation des drives dans des zônes à risques (présence de vapeurs ou de poussières inflammables), peut provoquer des incendies ou des explosions. Les drives doivent être installés loin des zônes dangeureuses, et équipés de moteurs appropriés.

1.4 Instruction for compliance with UL Mark (UL requirements), U.S. and Canadian electrical codes

Short circuit ratings
ADL300 inverters must be connected to a grid capable of supplying a symmetrical short-circuit power of less than or equal to “xxxx A rms.

The values of the “xxxx” A rms short-circuit current, in accordance with UL requirements (UL 508 c), for each motor power rating (Pn mot in the manual) are shown in the table below.

Short current rating	
Pn mot (kW)	SCCR (A)
1,1...37,3	5000
39....149	10000

Note!

Drive will be protected by semiconductor Fuse type as specified in the instruction manual.

Branch circuit protection
In order to protect drive against over-current use fuses specified in **par. 5.1**.

Environmental condition
The drive has to be considered “Open type equipment”. Max surrounding air temperature equal to 40°C. Pollution degree 2.

Wiring of the input and output power terminals
Use UL listed cables rated at 75°C and round crimping terminals. Crimp terminals with tool recommended by terminal manufacturer.
Field wiring terminals shall be used with the tightening torque specified in **par. 7.1.1.**

Over-voltage control
In case of CSA-requirements Overvoltage at mains terminal is achieved installing an overvoltage protection device as for :
Type OVR 1N 15 320 from ABB or similar.

Minimum time required for safe DC-link voltage
Before removing drive cover in order to access internal parts, after mains disconnection wait for time as follow :

Drive size	Safe time (sec)
size 1.....5	300

Over-speed; over-load/current limit; motor overload
Drive incorporate over-speed, over-current/current limit, motor overload protection. Instruction manual specify degree of protection and detailed installation instruction.

2 - Introduction to the product

The SIEIDrive ADL300 is the result of GEFRAN's experience in the civil lift engineering sector, gained from its commitment to working in close partnership with leading operators in the sector to develop technical solutions and application programs.
The ADL300 integrates the most complete and advanced lift inverter technology, for maximum synergy with the full range of installation requirements but, above all, to offer a cost-effective and immediate solution for lift control systems.
This drive is designed to power loads such as **asynchronous or synchronous** permanent magnet (brushless) motors, for applications in the lift sector.
This compact drive is suitable for installation in cabinets for roomless applications.

The ADL300 is available in two configurations:

- **ADL300 Basic**

Designed and produced to meet the full range of requirements in the lift sector, the ADL300 Basic features the following as standard:

- 8 programmable digital inputs (NPN/PNP) + an Enable input
- 4 single-contact programmable relay outputs
- Input for 5 Vdc TTL incremental digital encoder
- Input for absolute SinCos or Endat / SSI encoder
- Single output contactor: The ADL300 is certified for the use of a single output contactor, in accordance with UNI EN 81-1:1998 + A3, EN81-20, EN81-50.
- Safety Certification for a CONTACTORLESS operations: ADL300 is CERTIFIED as EN81-1:1998 + A3, EN81-20, EN81-50; SIL3 according to EN61800-5-2:2007.
- Integrated LED keypad
- Integrated EMI filter (models ADL300B-...-F)
- SD card for storing/copying parameters.

- **ADL300 Advanced**

To guarantee maximum programmability, the ADL300 Advanced is supplied as standard with no I/O or feedback cards, leaving the customer free to perform the appropriate configuration, choosing from an extensive range of options. The standard configuration consists of:

- Single output contactor: The ADL300 is certified for the use of a single output contactor, in accordance with UNI EN 81-1:1998 + A3, EN81-20, EN81-50.
- Safety Certification for a CONTACTORLESS operations: ADL300 is CERTIFIED as EN81-1:1998 + A3, EN81-20, EN81-50; SIL3 according to EN61800-5-2:2007.
- Integrated LED keypad
- Integrated EMI filter (models ADL300A-...-F)
- SD card for storing/copying parameters.

2.1 Dedicated features

The ADL300 incorporates basic and advanced lift functions in a single product, to ensure maximum comfort for all systems at all times.

• Speed control
EFC (Elevator Floor Control) function: separate function for independent management of short floors, landing zone, re-starting with lift not at floor and automatic deceleration point calculation.

• Position control
EPC (Elevator Positioning Control) function: separate function for independent management of direct arrival at the floor with internal position regulator and saving of floor distances (system autotuning).

• Lift sequence
Typical sequence of input/output signals used in civil lift engineering applications such as I/O management, braking, output contactor and door control.

• Parameters in linear unit
Possibility of selecting different engineering units (also with values for the US) for the main movement parameters, rpm (fpm) or m/s for speed, m/s^2, m/s^3 (ft/s^2, ft/s^3) for cabin acceleration.

• Lift mechanical parameters
Mechanical system parameters such as pulley diameter and speed ratio for converting system units and weights, system for calculating inertia and speed regulation for the desired response.

• Ramp generation

Independent configuration of acceleration and deceleration ramp parameters and of the 4 jerk values for maximum travelling comfort in the lift cabin. Two independent S-shaped ramps, selectable via digital input with 4 independent jerk settings. Dedicated deceleration ramp corresponding to the stop command.

• Multiple speeds

8 internally settable speed reference values. Possibility of overwriting at start-up with additional values to ensure smooth starting.

• Pre-torque (load compensation)

Initialisation of the speed regulator by the weight sensor to prevent jerks or bumpy starting.

• Increased overload

Overload capacity in line with typical lift application load cycles.

• Fan control logic

The fan control logic activates the internal fans according to the temperature.

• Emergency single-phase power supply to return to the floor

In emergency conditions a 230 V single-phase supply voltage can be used to return the cabin to the floor (by UPS power supply or batteries with EMS module).

• User-friendly menus

The menus feature lift-specific DISPLAY and motor STARTUP terminology

• Saving parameters

Drive parameters can be saved on the keypad (5 settings) or on a Secure Digital memory card.

• Fieldbus

The drive supports remote control via the CANopen (DS417) or DCP3/DCP4 protocol.

• Management of synchronous and asynchronous motors

The operating mode is selectable via parameter.

• Integrated encoder management

5 V TTL / 24V HTL incremental digital encoder (models ADL300A-...) or absolute SinCos, EnDat-SSi and Hiperface (models ADL300A-...) feedback selectable via parameter.

2.2 Other features

- Autotuning of motor parameters and automatic phasing for brushless motors.
- SSC (Sensorless Scalar Control) modulation reduces noise levels to a minimum.
- Switching frequency fixed at 10 kHz.
- Output voltage up to 98% of input voltage.
- Saving of messages relating to the last 30 repairs and indication of time of repair.
- Drive, motor and braking unit overload protection.
- Different digital and analog I/O cards can be selected to adapt the drive to the system (models ADL300A-...).
- Speed regulator adaptive.
- Readout of speed functions.
- Easy use of the equipment via:
  - terminal strip
  - Integrated LED keypad
  - optional keypad, simple and immediate to use, with magnetic fastening and remote control at distances of up to 15 m.
  - integrated RS232 serial communication with Modbus RTU protocol
- The output is protected against accidental grounding and output phase short circuit
- Speed regulator powered by switched-mode power supply from DC bus.
- Mains dip protection.
- Galvanic isolation between power and regulation sections.

2.3 Identification of components

The inverter converts the constant frequency and voltage of an existing three-phase network into DC voltage, from which it obtains a new three-phase network with variable voltage and frequency. With this variable three-phase network the speed of three-phase asynchronous and synchronous motors can be controlled continuously.

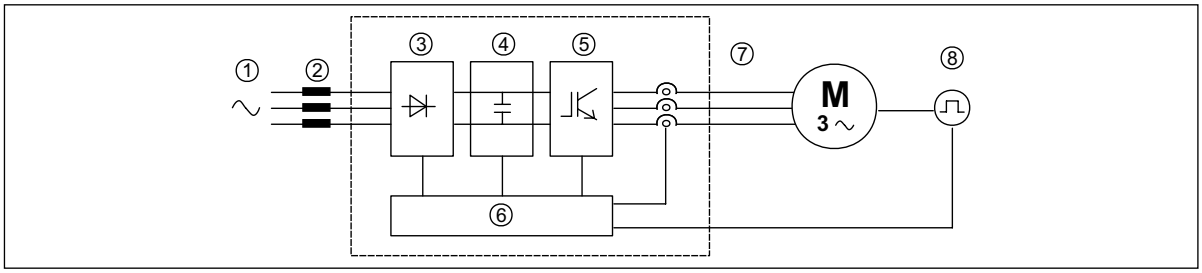

1. **Mains supply voltage**
2. **Mains choke** (see chapter 5.2)
3. **Three-phase rectifier bridge**

   Converts AC voltage into DC voltage via a three-phase full wave bridge.
4. **Intermediate circuit**

   With pre-load resistor and levelling capacitors DC voltage (U_{DC}) =√2 x mains voltage (U_{LN})
5. **IGBT inverter bridge**

   Converts DC voltage into three-phase AC voltage with variable amplitude and frequency
6. **Configurable control section**

   Cards for controlling and regulating the closed and open-loop power section. Commands, references and reactions are connected to these.
7. **Output voltage**

   Three-phase AC voltage.
8. **Speed feedback encoder** (see section A.3 of the Appendix)

2.4 Product identification

The basic technical data of the inverter are included in the product code and data plate.

The inverter must be selected according to the rated current of the motor.
The rated output current of the drive must be higher than or equal to the rated current of the motor used.
The speed of the asynchronous motor depends on the number of pole pairs and frequency (plate and catalog data).
If using a motor at speeds above the rated speed, contact the motor manufacturer for any related mechanical problems (bearings, unbalance, etc.). The same applies in case of continuous operation at frequencies of less than approx. 20 Hz (inadequate cooling, unless the motor is provided with forced ventilation).

Name of model (code)

ADL 300 A 1 040 - K B L - F -4-C-AD1

AD1 = R-ADL300-C Regulation card (ADL300B only)
24 = 24Vdc Input (ADL300B only)
ED = Endat Encoder (ADL300B only)
ED24 = Endat Encoder + 24Vdc Input (ADL300B only)
ER = + Encoder Repetition (ADL300B only)
ED-ER = Endat Encoder + Encoder Repetition (ADL300B only)
E24I = Endat Encoder + Incremental TTL + 24Vdc Input (ADL300B only)
E24R = Endat Encoder + Encoder Repetition + 24Vdc Input (ADL300B only)

CANBus:
C = included

Rated voltage:
2M = 230Vac, single-phase
2T = 230Vac,three-phase
4 = 400Vca, three-phase

EMI FILTER:
F = included

Lift application:
L = included

Braking unit:
X = not included
B = included

Keypad:
K = included
(1-line x 4-character alphanumerical LED display)

Inverter power in kW:

040 = 4kW	220 = 22kW
055 = 5,5kW	300 = 30kW
075 = 7,5kW	370 = 37kW
110 = 11kW	450 = 45kW
150 = 15kW	550 = 55kW
185 = 18,5kW	750 = 75kW

Mechanical dimensions of the drive:

1 = size 1	3 = size 3
2 = size 2	4 = size 4
	5 = size 5

Model
A = Advanced
B = Basic

Inverter, ADL300 series

Data plate

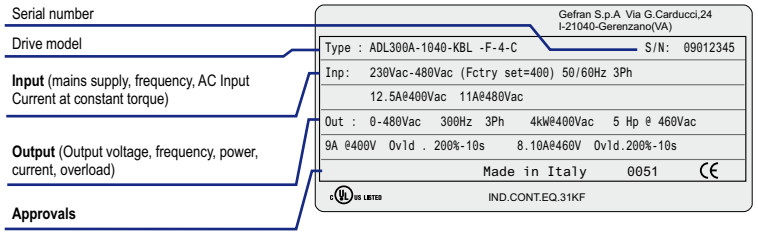

Firmware and card revision plate

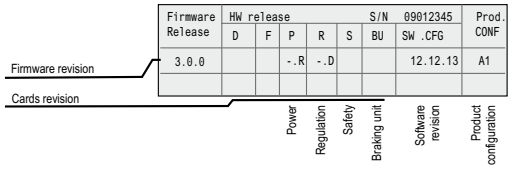

Position of plates on the drive

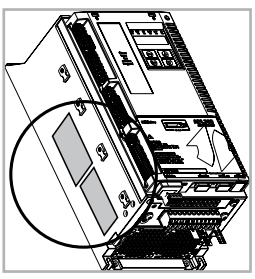

2.5 Standard configurations

ADL300A (Advanced)

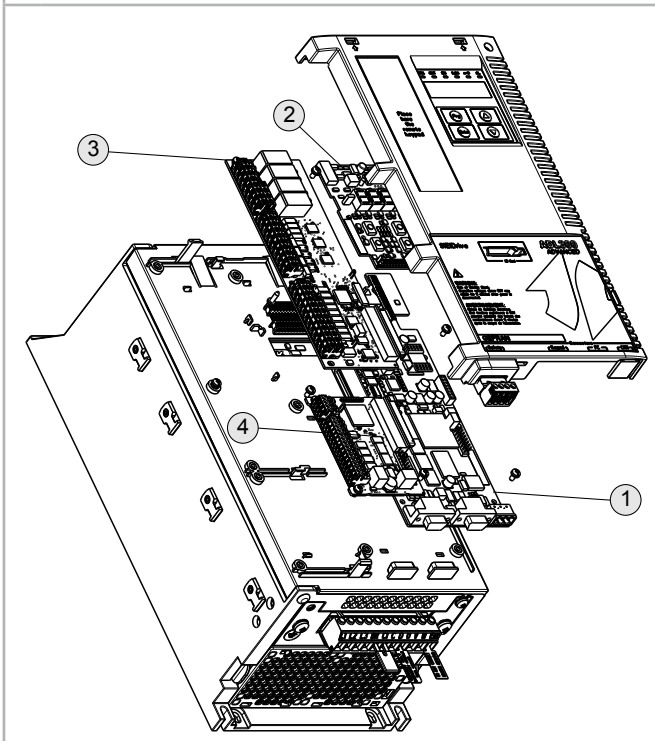

1	Regulation card (R-ADL300-A , RC-ADL300-A)
2	Display card (KB-ADL300)
3	I/O expansion card (EXP-IO-...)
4	Feedback expansion card (EXP-DE-... , EXP-SE)

ADL300B - (Basic SinCos)

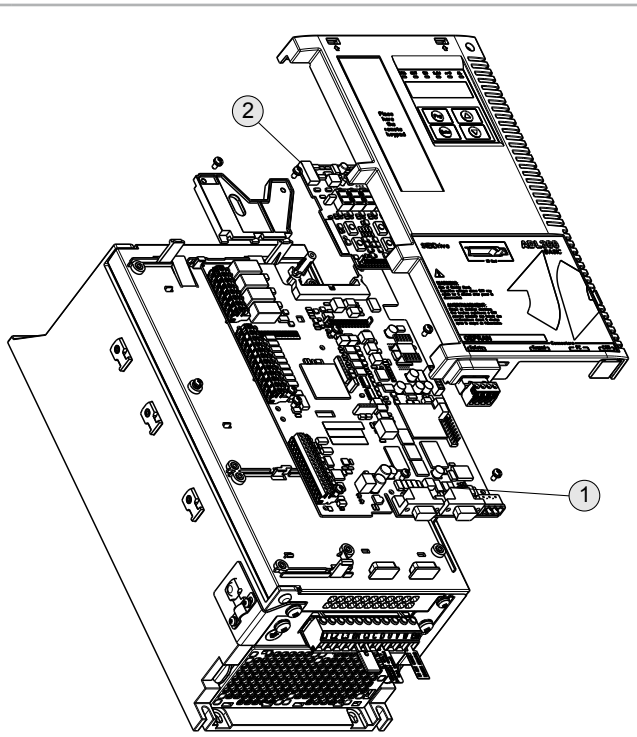

1	Regulation card (R-ADL300-B , RC-ADL300-B, R-ADL300-BS , RC-ADL300-BS)
2	Display card (KB-ADL300)
-	
-	

ADL300B - (Basic Endat)

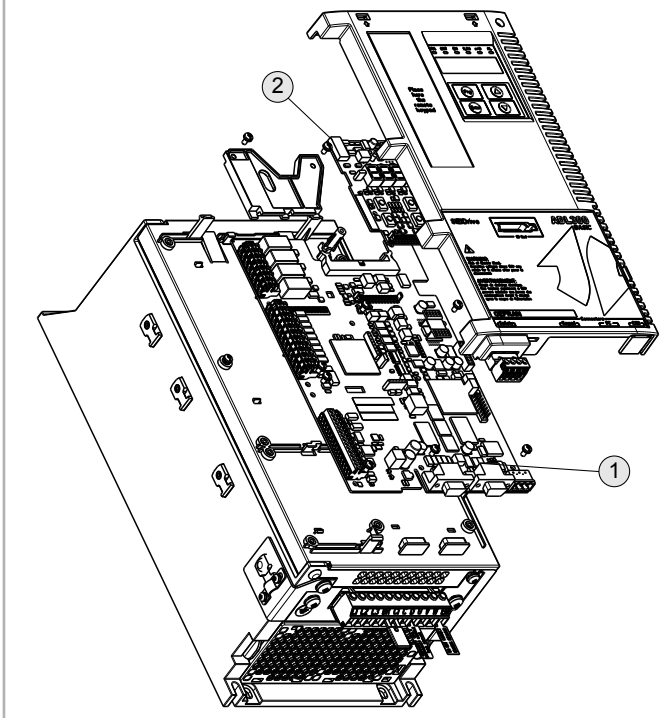

1	Regulation card (R-ADL300-BA, RC-ADL300-BA, R-ADL300-BAS, RC-ADL300-BAS)
2	Display card (KB-ADL300)

ADL300B - (Basic VGA)

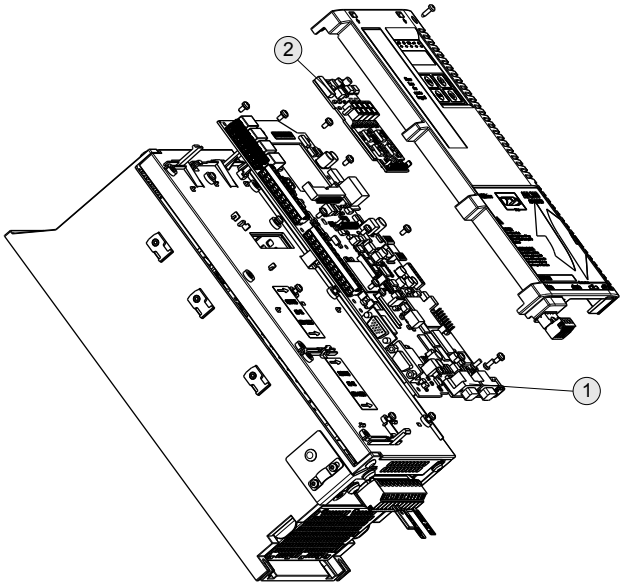

1	Regulation card (R-ADL300-C)
2	Display card (KB-ADL300)

		Type / Description	Code	ADL300 Advanced					
				ADL300A– ... –**KBL–4** 230-400-480 Vac, 3ph	**ADL300A**– ... –**KBL–F–4–C** 230-400-480 Vac, 3ph EMI Filter - CAN	**ADL300A**– ... –**KBL–2T** 200-230 Vac, 3ph	**ADL300A**– ... –**KBL–F–2T–C** 200-230 Vac, 3ph EMI Filter - CAN	**ADL300A**– ... –**KBL–2M** 200-230 Vac, 1ph	**ADL300A**– ... –**KBL–2M-C** 200-230 Vac, 1ph CAN
Regulation		**R-ADL300-A** Basic regulation card	--	●	×	●	×	●	×
		RC-ADL300-A Regulation card with integrated CAN	--	×	●	×	●	×	●
I/O card		**EXP-IO-D4-ADL** 2 digital inputs + 2 digital outputs	S567L	○	○	○	○	○	○
		EXP-IO-D5R3-F-ADL 5 Digital inputs + 3 Relay outputs	S5L08	○	○	○	○	○	○
		EXP-IO-D6A4R2-F-ADL 6 Digital inputs + 2 analog outputs + 2 analog inputs + 2 relay outputs	S580L	○	○	○	○	○	○
		EXP-IO-D8R4-ADL 8 Digital inputs + 4 Relay outputs	S568L	○	○	○	○	○	○
		EXP-IO-D8A4R4-ADL 8 digital inputs + 2 analog outputs + 4 analog inputs + 2 relay outputs	S570L	○	○	○	○	○	○
		EXP-IO-D12A2R4-ADL 8 digital inputs + 4 digital outputs + 4 analog inputs + 2 relay outputs	S569L	○	○	○	○	○	○
		EXP-IO-D16R4-ADL 12 digital inputs + 4 digital outputs + 4 relay outputs	S566L	○	○	○	○	○	○
Encoder cards		**EXP-DE-I1R1F2-ADL** Digital encoder 3 Channels + Repeat + 2 Freeze	S5L04	○	○	○	○	○	○
		EXP-DE-I1-ADL Digital encoder 2 Channels	S5L36	○	○	○	○	○	○
		EXP-SESC-I1R1F2-ADL Sinusoidal SinCos encoder 3 Channels + Repeat + 2 Freeze	S5L06	○	○	○	○	○	○
		EXP-SESC-I1R1-V-ADL Sinusoidal SinCos encoder 3 Channels + Repeat (VGA connectors)	S5L39	○	○	○	○	○	○
		EXP-EN/SSI-I1R1F2-ADL Sinusoidal encoder - Absolute EnDat (or EnDat Full Digital) + Repeat + 2 Freeze	S5L07	○	○	○	○	○	○
		EXP-SE-I1R1F2-ADL Sinusoidal encoder 3 Channels + Repeat + 2 Freeze	S571L	○	○	○	○	○	○
		EXP-HIP-I1R1F2-ADL Hiperface encoder 3 Channels + Repeat + 2 Freeze	S572L	○	○	○	○	○	○
Various		**KB-ADL300** Integrated keypad with LED display	--	●	●	●	●	●	●
		KB-ADL Programming keypad with memory (optional)	S5P2T	○	○	○	○	○	○
		KIT KEY SD-CARD Adapter for SD card (data loading memory) - (optional)	S72644	○	○	○	○	○	○
		KIT-POWER-SHIELD Power cable shielding kit S1-S2	S726101	○	○	○	○	○	○
		Power cable shielding kit S3	S726501	○	○	○	○	○	○

● = standard, ○ = optional , × = not possible

Note!

All the optional I/O and encoder cards available for the ADL300 Advanced versions or upon request are listed in the Appendix.

The firmware automatically recognises the ADL300 Basic or Advanced drive. The type of drive is displayed in the "Drive info" menu, parameter 476 Drive type (0= Basic-Sin, 1 = Advanced, 2 = Basic-VGA, 3 = Basic-End, 4= Basic-Sin 24V, 5 = Advanced 24V, 6 = Basic-VGA 24V, 7 = Basic-End 24V)..

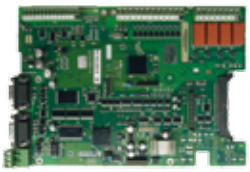

ADL300 Basic	Regulation card		Digital input	Analog input	Relay Output	CAN Port	24Vdc Input (External supply)	Sincos Encoder	Endat Encoder	Sinusoidal Encoder	Digital Encoder	Encoder Repetition	Fast Digital input (Freeze)
	Description	Code											
ADL300B-xxxx-KBL-4	R-ADL300-B	S5DL01	8 + 1 Enable	-	4	-	-	●	-	●	●	-	2
ADL300B-xxxx-KBL-2T													
ADL300B-xxxx-KBL-2M													
ADL300B-xxxx-KBL-F-4-C	RC-ADL300-B	S5DL03	8 + 1 Enable	-	4	●	-	●	-	●	●	-	2
ADL300B-xxxx-KBL-F-2T-C													
ADL300B-xxxx-KBL-2M-C													
ADL300B-xxxx-KBL-4-24	R-ADL300-BS	S5DL20	8 + 1 Enable	-	4	-	●	●	-	●	●	-	2
ADL300B-xxxx-KBL-F-4-C-24	RC-ADL300-BS	S5DL21	8 + 1 Enable	-	4	●	●	●	-	●	●	-	2
ADL300B-xxxx-KBL-4-ED	R-ADL300-BA	S5DL26	8 + 1 Enable	-	4	-	-	-	●	-	-	-	2
ADL300B-xxxx-KBL-2M-ED													
ADL300B-xxxx-KBL-F-4-C-ED	RC-ADL300-BA	S5DL27	8 + 1 Enable	-	4	●	-	-	●	-	-	-	2
ADL300B-xxxx-KBL-4-ED24	R-ADL300-BAS	S5DL24	8 + 1 Enable	-	4	-	●	-	●	-	-	-	2
ADL300B-xxxx-KBL-F-4-C-ED24	RC-ADL300-BAS	S5DL25	8 + 1 Enable	-	4	●	●	-	●	-	-	-	2
ADL300B-xxxx-KBL-F-4-C-ER	RC-ADL300-BR	S5DL28	8 + 1 Enable	-	4	●	-	●	-	●	●	●	2
ADL300B-xxxx-KBL-F-4-C-ED-ER	RC-ADL300-BAR	S5DL29	8 + 1 Enable	-	4	●	-	-	●	-	-	●	2
ADL300B-xxxx-KBL-F-4-C-E24I	RC-ADL300-BASF	S5DL36	8 + 1 Enable	-	4	●	●	-	●	-	●	-	2
ADL300B-xxxx-KBL-F-4-C-E24R	RC-ADL300-BASR	S5DL37	8 + 1 Enable	-	4	●	●	-	●	-	-	●	2
ADL300B-xxxx-KBL-4-AD1	R-ADL300-AD	S5DL12	8 + 1 Enable	2	4	-	-	●	-	●	●	●	-

Various					
ADL300B-....	**KB-ADL300** Integrated keypad with LED display	**KB-ADL** (code S5P2T) Programming keypad with memory (optional)	**KIT KEY SD-CARD** (code S72644) Adapter for SD card (data loading memory) - (optional)	**KIT-POWER-SHIELD** (code S726101) Power cable shielding kit S1-S2	**KIT-POWER-SHIELD** (code S726501) Power cable shielding kit S3

Note!

The firmware automatically recognises the ADL300 Basic or Advanced drive. The type of drive is displayed in the "Drive info" menu, parameter 476 Drive type (0= Basic-Sin, 1 = Advanced, 2 = Basic-VGA, 3 = Basic-End, 4= Basic-Sin 24V, 5 = Advanced 24V, 6 = Basic-VGA 24V, 7 = Basic-End 24V)..

3 - Transport and storage

Caution

Correct transport, storage, erection and mounting, as well as careful operation and maintenance are essential for proper and safe operation of the equipment.

Protect the inverter against physical shocks and vibration during transport and storage. Also be sure to protect it against water (rainfall) and excessive temperatures.

Le bon accomplissement des opérations de transport, de stockage, d'installation et de montage, ainsi que l'exploitation et l'entretien minutieux, sont essentiels pour garantir à l'appareil un fonctionnement adéquat et sûr.

Protéger le variateur contre les chocs et les vibrations pendant le transport et le stockage. Il faut également s'assurer qu'il est protégé contre l'eau (pluie), l'humidité et contre des températures excessives.

If the Drives have been stored for longer than two years, the operation of the DC link capacitors may be impaired and must be "reformed". Before commissioning devices that have been stored for long periods, connect them to a power supply for two hours with no load connected in order to regenerate the capacitors, (the input voltage has to be applied without enabling the drive).

En cas de stockage des variateurs pendant plus de deux ans, il est conseillé de contrôler l'état des condensateurs CC avant d'en effectuer le branchement. Avant la mise en service des appareils, ayant été stockés pendant long temps, il faut alimenter variateurs à vide pendant deux heures, pour régénérer les condensateurs : appliquer une tension d'alimentation sans actionner le variateur.

3.1 General

A high degree of care is taken in packing the ADL Drives and preparing them for delivery. They should only be transported with suitable transport equipment (see weight data). Observe the instructions printed on the packaging. This also applieswhen the device is unpacked and installed in the control cabinet.

Upon delivery, check the following:
- the packaging for any external damage
- whether the delivery note matches your order.

Open the packaging with suitable tools. Check whether:
- any parts were damaged during transport
- the device type corresponds to your order

In the event of any damage or of an incomplete or incorrect delivery please notify the responsible sales offices immediately. The devices should only be stored in dry rooms within the specified temperature ranges.

Note!

A certain degree of moisture condensation is permissible if this arises from changes in temperature. This does not, however, apply when the devices are in operation. Always ensure that there is no moisture condensation in devices that are connected to the power supply!

3.2 Permissible Environmental Conditions

Temperature:

storage	-25…+55°C (-13…+131°F), class 1K4 per EN50178
	-20…+55°C (-4…+131°F), for devices with keypad
transport	-25…+70°C (-13…+158°F), class 2K3 per EN50178
	-20…+60°C (-4…+140°F), for devices with keypad

Air humidity:

storage	5% to 95 %, 1 g/m^3 to 29 g/m^3 (Class 1K3 as per EN50178)
transport	95 % (3), 60 g/m^3 (4)

A light condensation of moisture may occur for a short time occasionally if the device is not in operation (class 2K3 as per EN50178)

Air pressure:

storage	[kPa] 86 a 106 (class 1K4 as per EN50178)
transport	[kPa] 70 a 106 (class 2K3 as per EN50178)

(3) Greatest relative air humidity occurs with the temperature @ 40°C (104°F) or if the temperature of the device is brought suddenly from -25 ...+30°C (-13°...+86°F).

(4) Greatest absolute air humidity if the device is brought suddenly from 70...15°C (158°...59°F).

4 - Specification

4.1 Environmental Conditions

Installation location	Pollution degree 2 or lower (free from direct sunligth, vibration, dust, corrosive or inflammable gases, fog, vapour oil and dripped water, avoid saline environment)
Installation altitude	Max 2000m (6562 feet) above sea level. With 1.2% reduction in output current for every 100 m starting from 1000 m.
Mechanical conditions for installation	Vibrational stress: EN 60721-3-3 Class 3M1
Operating temperature	-10…+45°C (32°…113°F)
Operating temperature	+45 ... +50°C (+113 … +122°F) with 1% derating every °C starting from 45°C and up to 50°C. Operation at temperatures of > 50°C is not allowed
Air humidity (operating)	from 5 % to 85 % and from 1 g/m³ to 25 g/m³ with no humidity (or condensation)
Air pressure (operating) [kPa]	from 70 to 106

4.2 Standards

Climatic conditions	EN 60721-3-3
Electrical safety	EN 50178, EN 61800-5-1, UL508C, UL840 degree of pollution 2
Vibration	Class 3M1 EN 60721-3-3
EMC compatibility	EN 12015 (ADL300-...-2M series with optional external filter)
Protection degree	IP20
Approvals	CE, c UL US LISTED
EC Directive	LVD 2014/35/EU, EMC 2014/30/EU, Lift 2014/33/EU, RoHS 2011/65/EU

4.3 Precision

4.3.1 Speed control

Speed control precision	Flux vector CL control with feedback and brushless: 0.01 % motor rated speed Flux vector OL control: ± 30 % rated slip of motor SSC control: ± 60 % rated slip of motor

4.3.2 Speed control limits

Speed range (*)	± 32000 rpm
Speed format (*)	32 bit
Frequency range	± 2000 Hz
Max frequency	Flux vector CL control with feedback and brushless: 300Hz, FVOL: 150 Hz, VF: 600 Hz
Min frequency	0 Hz

(*) referred to Full scale speed, PAR:680.

4.3.3 Torque control

Torque resolution (*)	> 0.1 %
Torque control precision (*)	Flux vector CL with feedback: ± 5%
Direct torque control	yes
Current limitation	Limits ±, Mot/gen limits, Variable limits

(*) referred to rated torque

4.3.4 Current rating

Overload	200% (sizes 4 and 5 = 180%) *10 sec with output frequency more than 3 Hz 150% with output frequency less than 3 Hz.
Switching frequency	10 kHz

4.4 Input electrical data

Choke _____ Sizes 1...3: Optional (DC or AC), sizes 4-5 : integrated (DC)

Note!

See chapter 5.2 for THD values in accordance with EN 12015 and for selection of external inductances.

Size	Input voltage U_{LN}	Input frequency	Overvoltage threshold	Undervoltage threshold	Effective input current I_N (@ In out)			DC-Link Capacity
	(Vac)	(Hz)	(Vdc)	(Vdc)	@ 230 Vac (A)	@ 400 Vac (A)	@ 480 Vac (A)	(μF)
ADL300-...-4 , 3ph								
1040	three-phase 230 - 380 - 400 - 460 - 480 Vac -15%+10%	50/60 Hz, ± 5%	820 Vdc	@ 480 Vac = 470 Vdc @ 460 Vac = 450 Vdc @ 400 Vac = 391 Vdc @ 380 Vac = 371 Vdc @ 230 Vac = 225 Vdc	12	11	10	470
1055					17	16	15	680
2075					23	22	20	680
2110					31	29	26	1020
3150					42	40	37	1500
3185					50	47	45	2250
3220					55	53	50	2700
4300					55	55	49	2350
4370					72	72	65	2350
4450					89	89	81	2800
5550					97	97	89	4700
5750					136	136	122	5600
ADL300-...-2T, 3ph								
2055	three-phase 200 - 230 Vac ±10%	50/60 Hz, ± 2%	500 Vdc	@ 200 Vac = 196 Vdc @ 230 Vac = 225 Vdc	31	-	-	1020
3075					42	-	-	1500
3110					53	-	-	2700
4150					55	-	-	2350
4185					72	-	-	2350
4220					89	-	-	2800
5300					97	-	-	4700
5370					136	-	-	5600
ADL300-...-2M, 1ph								
1011	single-phase 200 Vac -10%+10% 230 Vac -15%+10%	50/60 Hz, ± 2%	410 Vdc	@ 200 Vac = 196 Vdc @ 230 Vac = 225 Vdc	16	-	-	2200
1015					18	-	-	2200
2022					24	-	-	4050
2030					31	-	-	4050
3040					35	-	-	4950
3055					50	-	-	4950

4.5 Output electrical data

Maximum output voltage U2 _____ 0.98 x U_{LN} (U_{LN} = AC input voltage)
Maximum output frequency f2 _____ 300 Hz

The derating factors shown in the table below are applied to the rated DC output by the user. They are not automatically implemented by the drive: Idrive = In x K_{ALT} x K_T x K_V.

Size	I_N Rated output current (fsw = default)			P_N mot (Recommended motor power ,fsw = default)			Reduction factor			IGBT braking unit
	@U_{LN} = 230Vac (A)	@U_{LN} = 400Vac (A)	@U_{LN} = 460Vac (A)	@U_{LN} = 230Vac (kW)	@U_{LN} = 400Vac (kW)	@U_{LN} = 460Vac (Hp)	K_V (1)	K_T (2)	K_{ALT} (3)	
ADL300-...-4, 3ph										
1040	9	9	8,1	2	4	5	0.95	0.95	1.2	Standard internal (with external resistor); braking torque 150% MAX
1055	13.5	13.5	12.2	3	5.5	7.5	0.95	0.95	1.2	
2075	18.5	18.5	16.7	4	7.5	10	0.95	0.95	1.2	
2110	24.5	24.5	22	5,5	11	15	0.95	0.95	1.2	
3150	32	32	28.8	7,5	15	20	0.95	0.95	1.2	
3185	39	39	35.1	9	18.5	25	0.95	0.95	1.2	
3220	45	45	40.5	11	22	30	0.95	0.95	1.2	
4300	60	60	54	15	30	40	0.95	0.95	1.2	
4370	75	75	67.5	18.5	37	50	0.95	0.95	1.2	
4450	90	90	81	22,0	45	60	0.95	0.95	1.2	
5550	105	105	94	30	55	75	0.95	0.95	1.2	
5750	150	150	135	37	75	100	0.95	0.95	1.2	External optional

Size	I_N Rated output current (fsw = default)			P_N mot (Recommended motor power ,fsw = default)			Reduction factor		IGBT braking unit
	@U_{LN} = 200-230Vac (A)			@U_{LN} = 200-230Vac (kW)		@U_{LN} = 200-230Vac (Hp)	K_T (2)	K_{ALT} (3)	
ADL300-...-2T, 3ph									
2055	24.5	-	-	5.5	-	7.5	0.95	1.2	Standard internal (with external resistor); braking torque 150% MAX
3075	32	-	-	7.5	-	10	0.95	1.2	
3110	45	-	-	11	-	15	0.95	1.2	
4150	60	-	-	15	-	20	0.95	1.2	
4185	75	-	-	18.5	-	25	0.95	1.2	
4220	90	-	-	22	-	30	0.95	1.2	
5300	105	-	-	30	-	40	0.95	1.2	
5370	150	-	-	37	-	50	0.95	1.2	External optional

Size	I_N Rated output current (fsw = default)			P_N mot (Recommended motor power ,fsw = default)			Reduction factor		IGBT braking unit
	@U_{LN} = 230Vac (A)			@U_{LN} = 230Vac (kW)			K_T (2)	K_{ALT} (3)	
ADL300-...-2M, 1ph									
1011	6	-	-	1.1	-	-	0.95	1.2	Standard internal (with external resistor); braking torque 150% MAX
1015	6.8	-	-	1.5	-	-	0.95	1.2	
2022	9.6	-	-	2.2	-	-	0.95	1.2	
2030	13	-	-	3	-	-	0.95	1.2	
3040	15	-	-	4	-	-	0.95	1.2	
3055	22	-	-	5.5	-	-	0.95	1.2	

(1) Kv : Derating factor for mains voltage at 460Vac and power supply from AFE200.

(2) K_T: Derating factor for ambient temperature of 50°C (1% every °C above 45°C)

(3) K_{ALT}: Derating factor for installation at altitudes above 1000 meters a.s.l. Value to be applied = 1.2% each 100 m increase above 1000 m.
E.g.: Altitude 2000 m, Kalt = 1.2% * 10 = 12% derating; In derated = (100 - 12) % = 88 % I_N

4.5.1 Derating values in overload condition

In overload conditions the output current depends on the output frequency, as shown in the figure below.

Figure 4.5.1-A: Ratio between overload/output frequency (ADL300-...-4 - ADL300-...-2T)

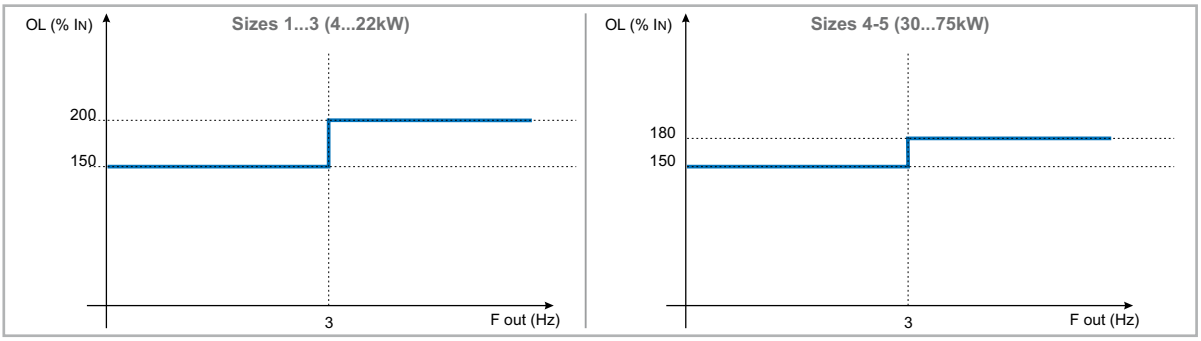

Figure 4.5.1-B: Ratio between overload/output frequency (ADL300-...-2M)

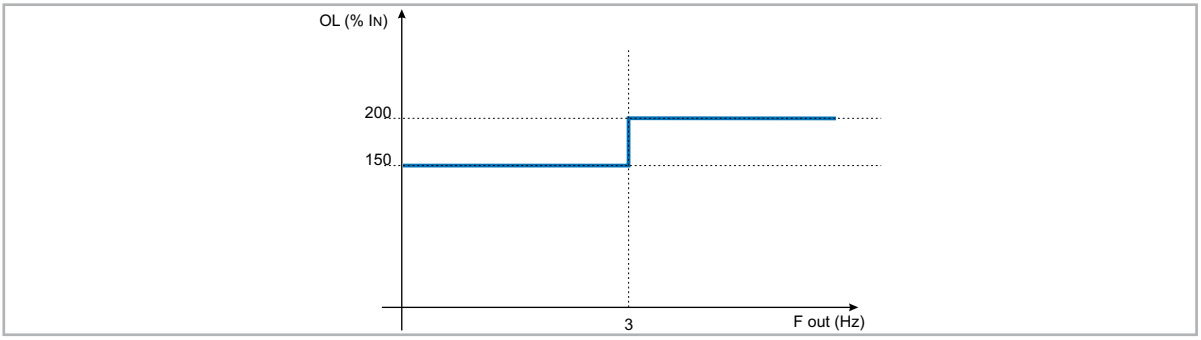

4.5.2 Derating values for switching frequency

The switching frequency is modified according to the temperature of the drive (measured on the heat sink), as shown in the figure below.

Figure 4.5.2: Ratio between switching frequency/heat sink temperature

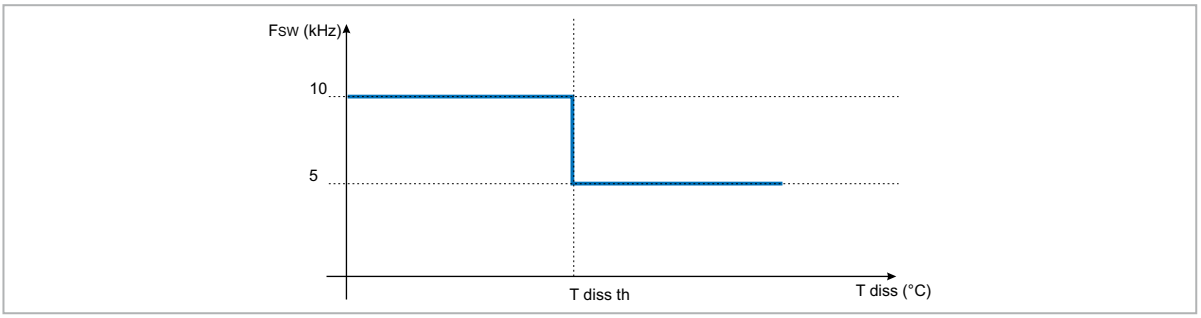

4.5.3 Kalt: Ambient temperature reduction factor

Figure 4.5.3: Tamb reduction coefficient

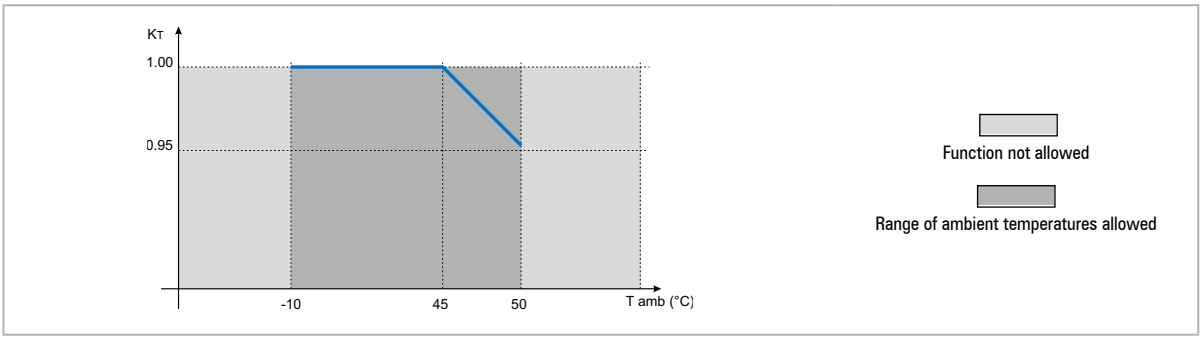

4.6 Voltage level of the inverter for safe operations

The minimum time between the moment in which an ADL inverter is disabled from the mains and that in which an operator can operate on internal parts of the inverter, without the danger of electric shock, **is 5 minutes**.

Attention

This value takes into account the time to turn off an inverter supplied at 460 V_{AC} + 10%, without any options (time indicated for disabled inverter condition).

4.7 No-load consumption (Energy rating)

Size	No. of pre-loads allowed	Power-on time [secs]	Stand-by consumption "Fan Off" [W]	Fan consumption [W]	Stand-by consumption "Fan On" [W]
ADL300-...-4, 3ph					
1040	1 each 20 sec.	5 abt.	20	4	24
1055	1 each 20 sec.	5 abt.	20	10	30
2075	1 each 20 sec.	5 abt.	20	10	30
2110	1 each 20 sec.	5 abt.	20	8	28
3150	1 each 20 sec.	5 abt.	20	16	36
3185	1 each 20 sec.	5 abt.	20	15	35
3220	1 each 20 sec.	5 abt.	20	15	35
4300	1 each 20 sec.	5 abt.	25	25	45
4370	1 each 20 sec.	5 abt.	25	36	56
4450	1 each 20 sec.	5 abt.	25	36	56
5550	1 each 20 sec.	5 abt.	25	34	59
5750	1 each 20 sec.	5 abt.	25	72	97
ADL300-...-2T, 3ph					
2055	1 each 20 sec.	5 abt.	20	8	28
3075	1 each 20 sec.	5 abt.	20	16	36
3110	1 each 20 sec.	5 abt.	20	15	35
4150	1 each 20 sec.	5 abt.	25	25	45
4185	1 each 20 sec.	5 abt.	25	36	56
4220	1 each 20 sec.	5 abt.	25	36	56
5300	1 each 20 sec.	5 abt.	25	34	59
5370	1 each 20 sec.	5 abt.	25	72	97
ADL300-...-2M, 1ph					
1011	1 each 20 sec.	5 abt.	20	4	24
1015	1 each 20 sec.	5 abt.	20	10	30
2022	1 each 20 sec.	5 abt.	20	10	30
2030	1 each 20 sec.	5 abt.	20	8	28
3040	1 each 20 sec.	5 abt.	20	16	36
3055	1 each 20 sec.	5 abt.	20	15	35

4.8 Cooling

All inverters are equipped with internal fans.

Size	**Pv (Heat dissipation)**	**Fan capacity**		**Minimum cabinet opening for cooling**
	@U_{LN}=230...460V_{AC} (*)	Heat sink (m^3/h)	Internal (m^3/h)	(cm^2)
ADL300-...-4, 3ph				
1040	150	35	-	72
1055	250	2 x 58	-	144
2075	350	2 x 58	-	144
2110	400	2 x 35	-	144
3150	600	2 x 98	32	328
3185	700	2 x 98	32	328
3220	900	2 x 104	32	328
4300	1200	2 x 98	2 x 64	512
4370	1400	2 x 190	2 x 64	595
4450	1700	2 x 190	2 x 64	595
5550	2100	2 x 285	170	864
5750	2900	2 x 285	2 x 170	1152
ADL300-...-2T, 3ph				
2055	250	2 x 58	-	144
3075	350	2 x 58	-	144
3110	400	2 x 35	-	144
4150	600	2 x 98	32	328
4185	700	2 x 98	32	328
4220	900	2 x 104	32	328
5300	1200	2 x 98	2 x 64	512
5370	1400	2 x 190	2 x 64	595
ADL300-...-2M, 1ph				
1011	70	32	-	72
1015	80	32	-	144
2022	130	2 x 32	-	144
2030	170	2 x 32	-	144
3040	200	1 x 80	32	328
3055	290	1 x 80	32	328

(*) values that refer to operation at default switching frequency.

4.9 Weights and dimensions

Figure 4.9.1: Size 1 dimensions

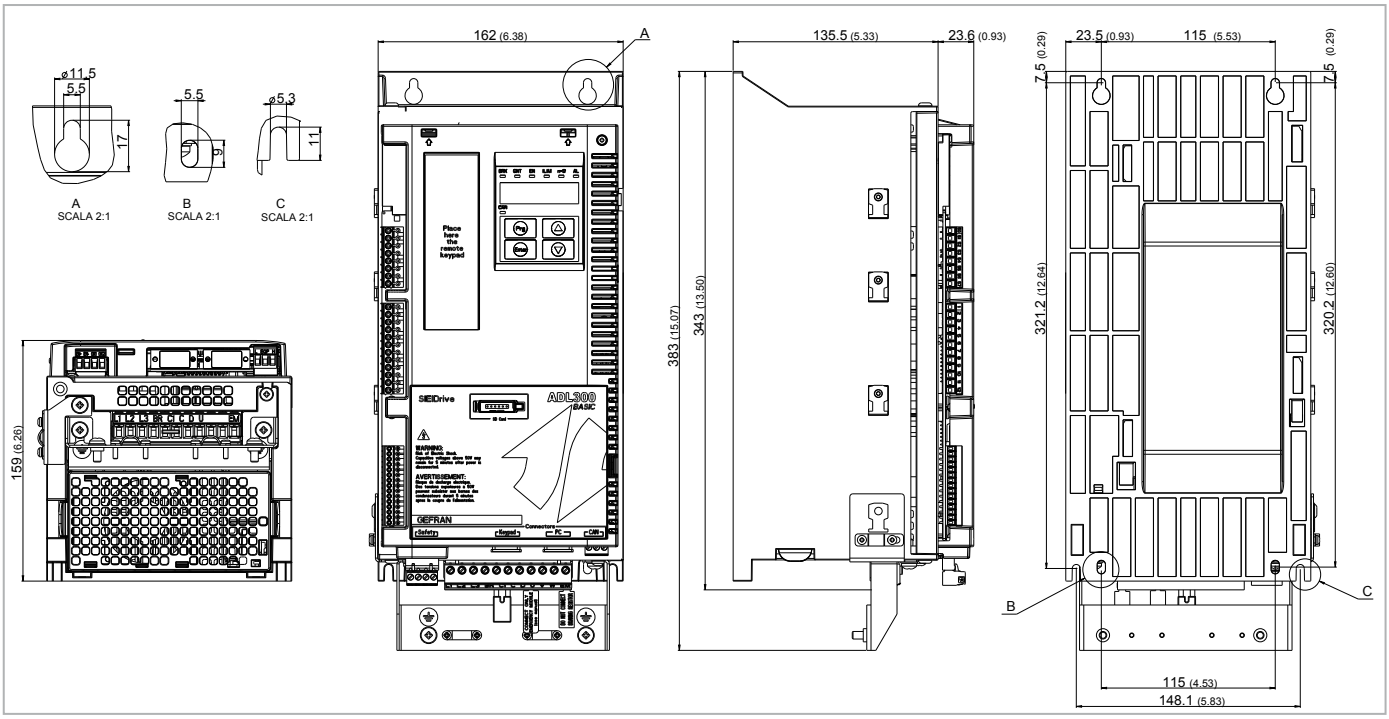

Sizes	Dimensions: Width x Height x Depth		Weight	
	(mm)	(inches)	(kg)	(lbs)
ADL300.- 1040/1055-...-4	162 x 343 x 159	6.38 x 13.50 x 6,26	5.8	12.8
ADL300.- 1011/1015-...-2M				

Figure 4.9.2: Size 2 dimensions

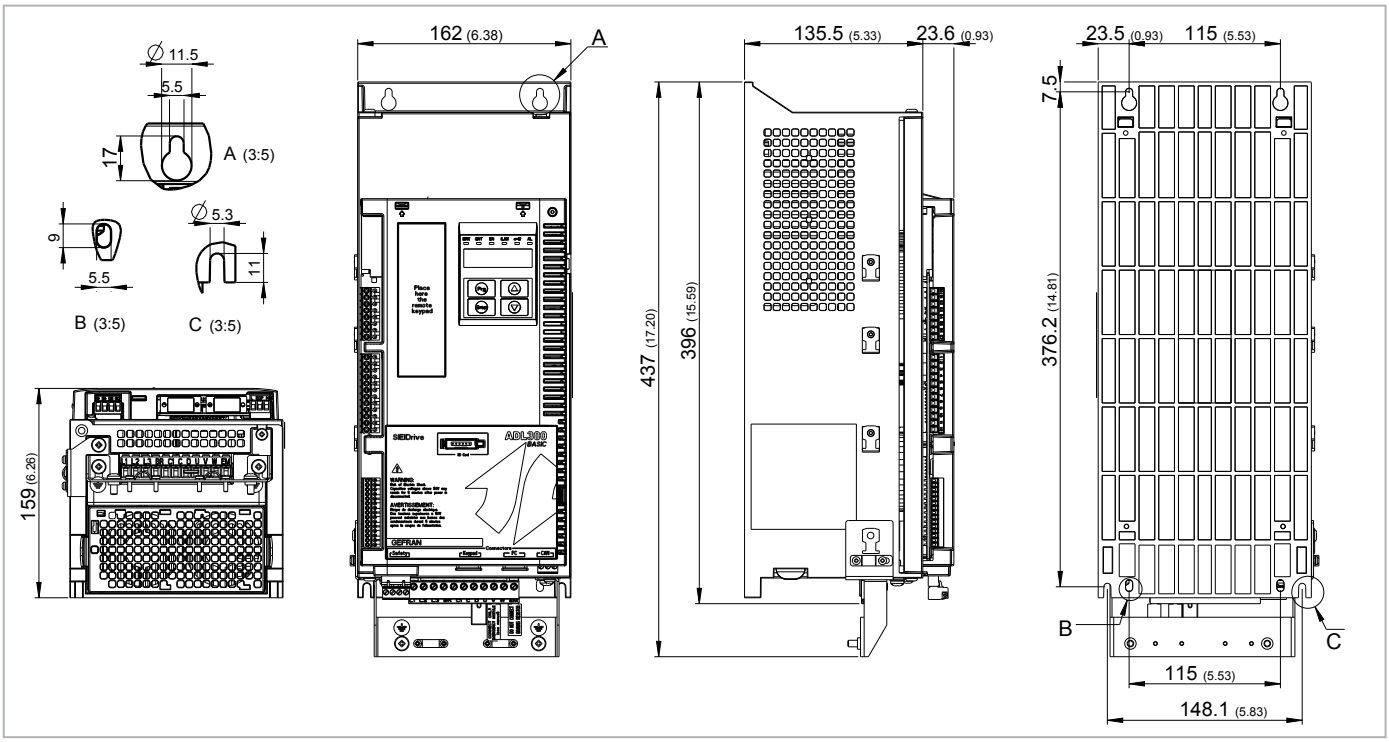

Sizes	Dimensions: Width x Height x Depth		Weight	
	(mm)	(inches)	(kg)	(lbs)
ADL300.- 2075/2110-...-4	162 x 396 x 159	6.38 x 15.59 x 6.26	7.8	17.2
ADL300.- 2055-...-2T				
ADL300.- 2022/2030-...-2M				

Figure 4.9.3: Size 3 dimensions

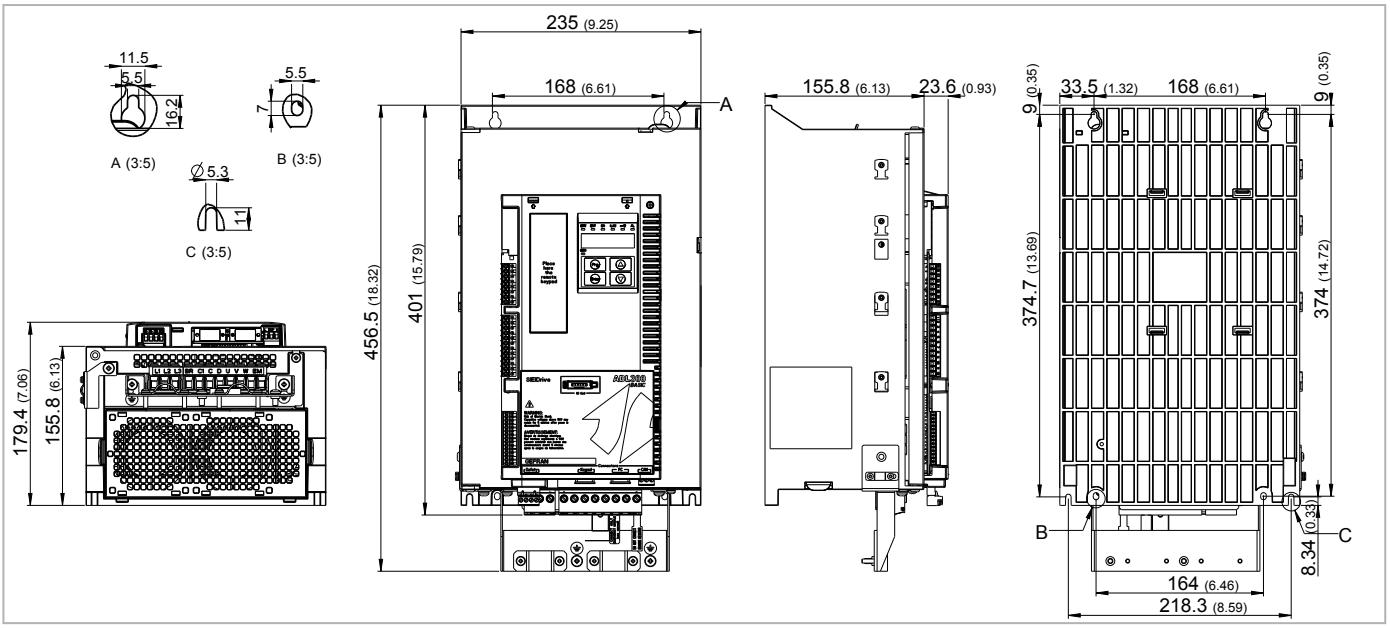

Sizes	Dimensions: Width x Height x Depth		Weight	
	(mm)	(inches)	(kg)	(lbs)
ADL300.- 3150/ 3185/ 3220-...-4	235 x 401 x 179.4	9.25 x 15.79 x 7.06	10.5	23.15
ADL300.- 3075/3110-...-2T				
ADL300.- 3040/3055-...-2M				

Figure 4.9.4: Size 4 dimensions

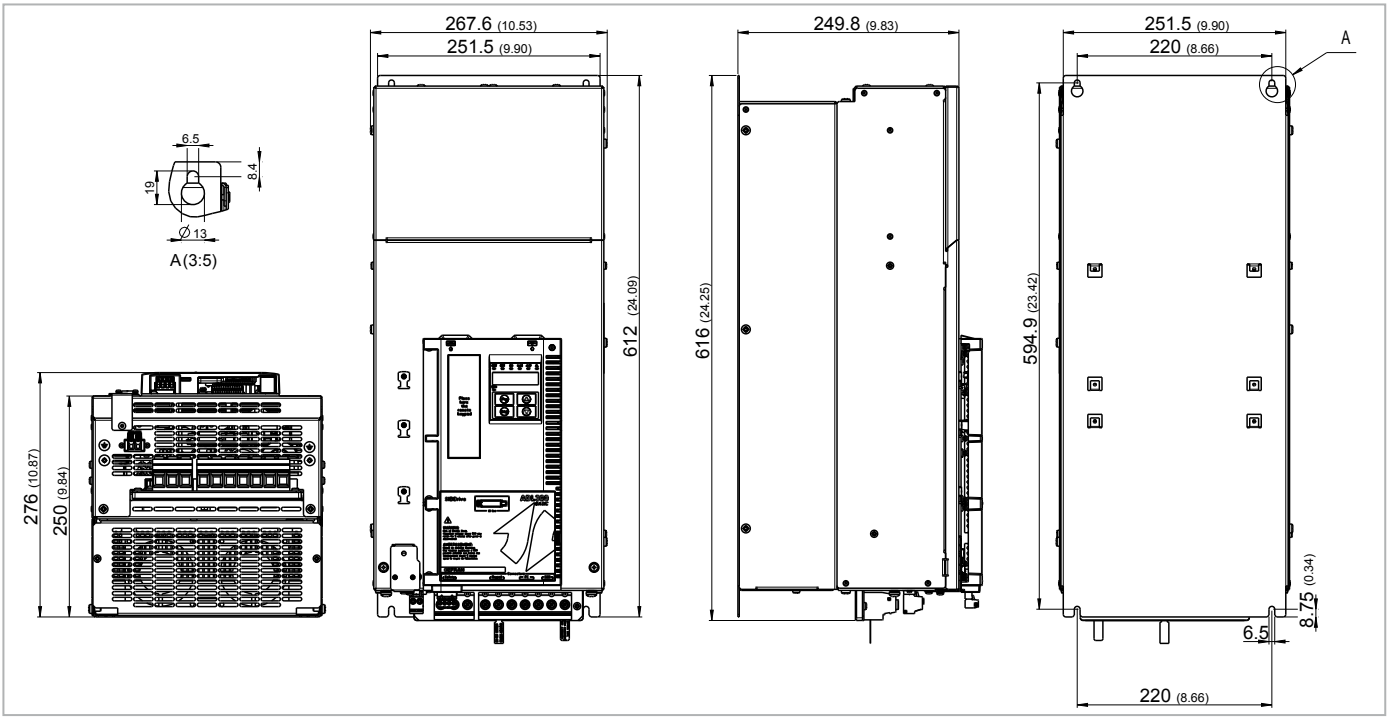

Sizes	Dimensions: Width x Height x Depth		Weight	
	(mm)	(inches)	(kg)	(lbs)
ADL300.- 4300/ 4370/ 4450-...-4	267.6 x 616 x 276	10.53 x 24.25 x 10.87	32	70.6
ADL300.- 4150/4185-...-2T				

Figure 4.9.5: Size 5 dimensions

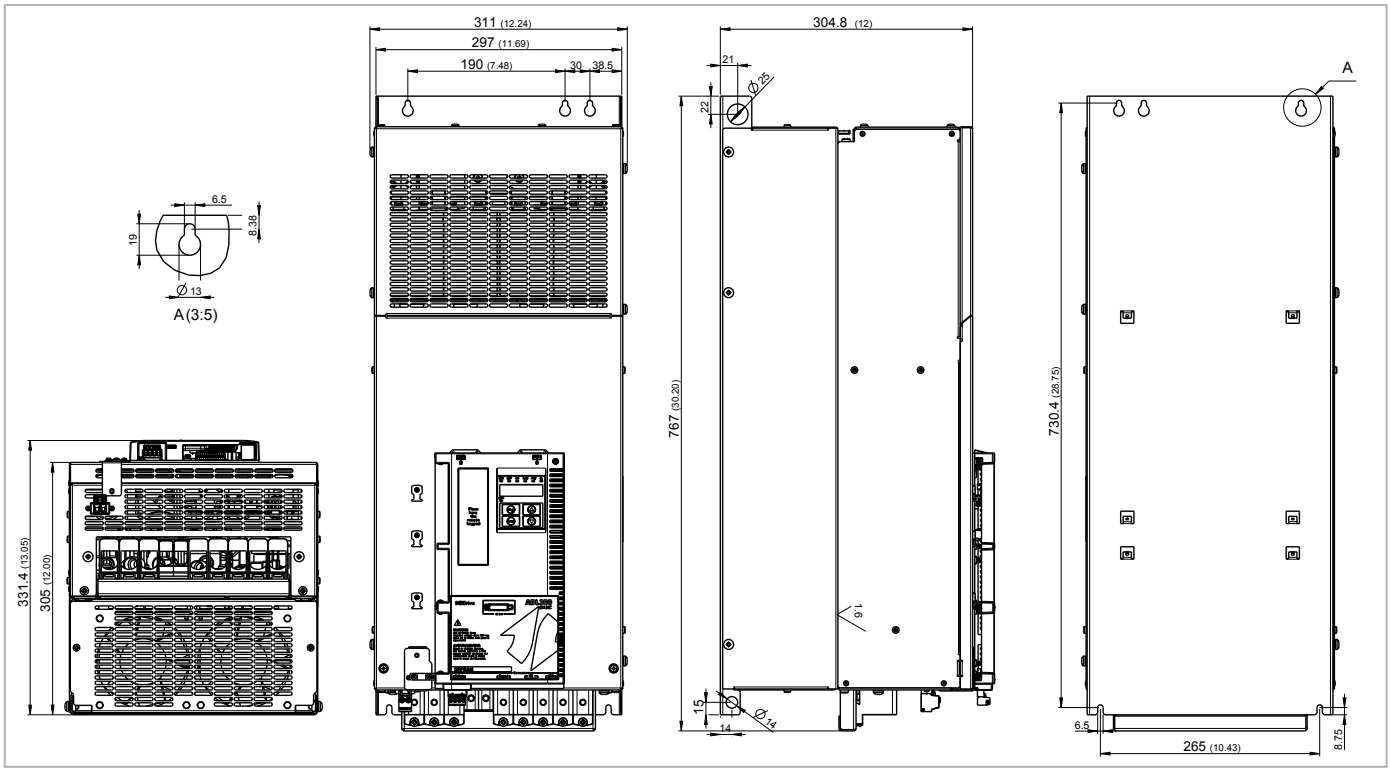

Sizes	Dimensions: Width x Height x Depth		Weight	
	(mm)	(inches)	(kg)	(lbs)
ADL300.- 5550/5750-...-4	311 x 767 x 331.4	12 x 30.2 x 13.05	60	132.3
ADL300.- 5300/5370-...-2T				

5 - Options

5.1 Optional external fuses

5.1.1 Network side fuses (F1)

The inverter must be fused upstream on the network side.
Use fast-acting fuses only.

Size	F1 - External network side fuses				
	DC link capacitor hours of service life [h]	EUROPE		AMERICA	
		Type	Code	Type	Code
ADL300-...-4, 3ph					
1040	> 15000	GRD2/20	F4D15	A70P20	S7G48
1055	> 15000	GRD2/25	F4D16	A70P25	S7G51
2075	> 15000	GRD3/35	F4D20	A70P40	S7G52
2110	> 15000	Z22GR40	F4M16	A70P40	S7G52
3150	> 15000	Z22GR63	F4M17	A70P60-4	S7I34
3185	> 15000	Z22GR80	F4M19	A70P80	S7G54
3220	> 15000	Z22GR80	F4M19	A70P80	S7G54
4300	> 15000	Z22GR80	F4M19	A70P80	S7G54
4370	> 15000	Z22GR100	F4M21	A70P100	S849B
4450	> 15000	Z22GR100	F4M21	A70P100	S849B
5550	> 15000	S00/üf1/80/200A/690V	F4G23	A70P200	S7G58
5750	> 15000	S00/üf1/80/200A/690V	F4G23	A70P200	S7G58
ADL300-...-2T, 3ph					
2055	> 15000	GRD2/25	F4D16	A70P25	S7G51
3075	> 15000	GRD3/35	F4D20	A70P40	S7G52
3110	> 15000	Z22GR40	F4M16	A70P40	S7G52
4150	> 15000	Z22GR63	F4M17	A70P60-4	S7I34
4185	> 15000	Z22GR80	F4M19	A70P80	S7G54
4220	> 15000	Z22GR80	F4M19	A70P80	S7G54
5300	> 15000	Z22GR80	F4M19	A70P80	S7G54
5370	> 15000	Z22GR100	F4M21	A70P100	S849B
ADL300-...-2M, 1ph					
1011	> 15000	GRD2/25	F4D16	A70P25	S7G51
1015	> 15000	GRD2/25	F4D16	A70P25	S7G51
2022	> 15000	GRD3/35	F4D20	A70P40	S7G52
2030	> 15000	Z22GR40	F4M16	A70P40	S7G52
3040	> 15000	Z22GR63	F4M17	A70P60-4	S7I34
3055	> 15000	Z22GR80	F4M19	A70P80	S7G54

Technical data for fuses, including dimensions, weights, power leakage, fuse carriers etc. are reported in the corresponding manufacturers' data sheets:
GRD... (E27), S00... Jean Müller, Eltville

A70... Ferraz

5.2 Input chokes

The three-phase mains choke is strongly recommended in order to:

- limit the RMS input current of the ADL300 inverter.
- increase the life of intermediate circuit capacitors and reliability of input diodes.
- reduce mains harmonic content
- reduce problems due to power supply via a low impedance line (≤ 1%).

In accordance with EN 12015 (THD values < 35%), provide the following:

- sizes ≤ 22kW: DC input inductance (see paragraph 5.2.2)
- sizes ≥ 30kW: AC input inductance (see paragraph 5.2.1).

5.2.1 AC input chokes

Size	Effective input current I_N (@400V/50Hz, with AC input chokes) (A)	Model	Code	Dimensions: Width x Height x Depth mm [inches]	Weight kg [lbs]
ADL300-...-4, 3ph					
1040	9	LR3y-2040	S7AAG	120 x 125 x 65 [4.7 x 4.9 x 2.6]	2 [4.4]
1055	13,5	LR3y-2055	S7AB5	120 x 125 x 75 [4.7 x 4.9 x 2.6]	2.2 [4.4]
2075	18	LR3y-2075	S7AB6	150 x 155 x 79 [5.9 x 6.1 x 3.1]	4.9 [10.8]
2110	24	LR3y-3110	S7AB7	150 x 155 x 79 [5.9 x 6.1 x 3.1]	5 [11]
3150	32	LR3y-3150	S7AB8	150 x 169 x 85 [5.9 x 6.7 x 3.3]	5.5 [12.1]
3185	39	LR3y-3150	S7AB8	150 x 169 x 85 [5.9 x 6.7 x 3.3]	5.5 [12.1]
3220	44,5	LR3-022	S7FF4	180 x 182 x 130 [7.1 x 7.2 x 5.1]	7.8 [17.2]
4300	53	LR3-022	S7FF4	180 x 182 x 130 [7.1 x 7.2 x 5.1]	7.8 [17.2]
4370	70	LR3-037	S7FF2	180 x 160 x 185 [7.1 x 6.30 x 7.3]	9.5 [20.9]
4450	85	LR3-037	S7FF2	180 x 160 x 185 [7.1 x 6.30 x 7.3]	9.5 [20.9]
5550	93	LR3-055	S7FF1	180 x 180 x 185 [7.1 x 7.1 x 7.3]	12 [26.5]
5750	130	LR3-090	S7D19	300 x 205 x 265 [11.8 x 8.1 x 10.4]	30 [66.1]
ADL300-...-2T, 3ph					
2055	18,2	LR3y-2075	S7AB6	150 x 155 x 79 [5.9 x 6.1 x 3.1]	4.9 [10.8]
3075	25	LR3y-3110	S7AB7	150 x 155 x 79 [5.9 x 6.1 x 3.1]	5 [11]
3110	32,5	LR3y-3150	S7AB8	150 x 169 x 85 [5.9 x 6.7 x 3.3]	5.5 [12.1]
4150	39	LR3y-3150	S7AB8	150 x 169 x 85 [5.9 x 6.7 x 3.3]	5.5 [12.1]
4185	55	LR3-022	S7FF4	180 x 182 x 130 [7.1 x 7.2 x 5.1]	7.8 [17.2]
4220	69	LR3-030	S7FF3	180 x 160 x 185 [7.1 x 6.30 x 7.3]	8.2 [18.1]
5300	84	LR3-037	S7FF2	180 x 160 x 185 [7.1 x 6.30 x 7.3]	9.5 [20.9]
5370	98	LR3-037	S7FF2	180 x 160 x 185 [7.1 x 6.30 x 7.3]	9.5 [20.9]

5.2.2 DC input chokes

Size ADL300-...-4, 3ph	Effective input current I_N (with external DC chokes)			External DC chokes					
	@230V/50Hz (A)	@400V/50Hz (A)	@480V/50Hz (A)	Rated current (Arms)	Overload current (*) (Arms)	Model	Code	Dimensions: Width x Height x Depth mm [inches]	Weight kg [lbs]
1040	8	8	7.5	10	20	LDC-004	S7AI10	99 x 96 x 93 [3.90 x 3.78 x 3.66]	2.4 [5.3]
1055	12	12	11	16	31	LDC-005	S7AI11	125 x 112 x 98 [4.92 x 4.41 x 3.86]	4.1 [9.0]
2075	16	16	14	21	41	LDC-007	S7AI12	125 x 127 x 122 [4.92 x 5.00 x 4.80]	4.9 [10.8]
2110	21	21	18	28	54	LDC-011	S7AI13	125 x 127 x 142 [4.92 x 5.00 x 5.59]	6.6 [14.6]
3150	28	28	25.5	36	70	LDC-015	S7AI14	125 x 127 x 152 [4.92 x 5.00 x 5.98]	8 [17.6]
3185	34	34	32	45	90	LDC-022	S7AI15	155 x 160 x 148 [6.10 x 6.30 x 5.83]	8.5 [18.7]
3220	39.5	39.5	35.5	45	90	LDC-022	S7AI15	155 x 160 x 148 [6.10 x 6.30 x 5.83]	8.5 [18.7]
4300 ... 5750	Internal choke								

Size ADL300-...-2T, 3ph	Effective input current I_N (@230V/50Hz, with external DC chokes) (A)	External DC chokes					
		Rated current (Arms)	Overload current (*) (Arms)	Model	Code	Dimensions: Width x Height x Depth mm [inches]	Weight kg [lbs]
2055	12	28	54	LDC-011	S7AI13	125 x 127 x 142 [4.92 x 5.00 x 5.59]	6.6 [14.6]
3075	16	36	70	LDC-015	S7AI14	125 x 127 x 152 [4.92 x 5.00 x 5.98]	8 [17.6]
3110	21	45	90	LDC-022	S7AI15	155 x 160 x 148 [6.10 x 6.30 x 5.83]	8.5 [18.7]
4150	Internal choke						
4185							
4220							
5300 - 5370							

(*) 10s every 60s.
Max room operating temperature = 50°C [122°F].

5.3 AC output chokes

The ADL300 inverter can be used with standard motors or motors designed specifically for use with inverters. The latter usually have a higher isolation rating to better withstand PWM voltage Examples of reference regulations are provided below: motors designed for use with inverters do not require any specific filtering of output from the inverter. For standard motors, especially with long cable runs (typically over 100 m) an output choke may be necessary to maintain the voltage waveform with the specified limits.

The range of recommended chokes are listed in the following table. The rated current of the chokes should be approx. 20% higher than that of the inverter in order to take into account additional losses due to modulation of the output waveform.

Size	Model	Code	**Dimensions:** Width x Height x Depth mm [inches]	**Weight** kg [lbs]
ADL300-...-4, 3ph				
1040	LU3-005	S7FG3	180 x 170 x 110 [7.1 x 6.7 x 4.3]	5.8 [12.8]
1055	LU3-005	S7FG3	180 x 170 x 110 [7.1 x 6.7 x 4.3]	5.8 [12.8]
2075	LU3-005	S7FG3	180 x 170 x 110 [7.1 x 6.7 x 4.3]	5.8 [12.8]
2110	LU3-011	S7FG4	180 x 180 x 130 [7.1 x 7.1 x 5.1]	8 [17.6]
3150	LU3-015	S7FH2	180 x 160 x 170 [7.1 x 6.3 x 6.7]	7.5 [16.5]
3185	LU3-015	S7FH2	180 x 160 x 170 [7.1 x 6.3 x 6.7]	7.5 [16.5]
3220	LU3-022	S7FH3	180 x 160 x 185 [7.1 x 6.3 x 7.3]	8 [17.6]
4300	LU3-030	S7FH4	180 x 170 x 185 [7.1 x 6.7 x 7.3]	10 [22]
4370	LU3-030	S7FH4	180 x 170 x 185 [7.1 x 6.7 x 7.3]	10 [22]
4450	LU3-037	S7FH5	180 x 170 x 185 [7.1 x 6.7 x 7.3]	10 [22]
5550	LU3-055	S7FH6	240 x 170 x 216 [9.4 x 6.7 x 8.5]	16 [35.3]
5750	LU3-090	S7FI0	180 x 195 x 165 [7.1 x 7.7 x 4.5]	15 [33.1]
ADL300-...-2T, 3ph				
2055	LU3-011	S7FG4	180 x 180 x 130 [7.1 x 7.1 x 5.1]	8 [17.6]
3075	LU3-011	S7FG4	180 x 180 x 130 [7.1 x 7.1 x 5.1]	8 [17.6]
3110	LU3-015	S7FH2	180 x 160 x 170 [7.1 x 6.3 x 6.7]	7.5 [16.5]
4150	LU3-022	S7FH3	180 x 160 x 185 [7.1 x 6.3 x 7.3]	8 [17.6]
4185	LU3-030	S7FH4	180 x 170 x 185 [7.1 x 6.7 x 7.3]	10 [22]
4220	LU3-037	S7FH5	180 x 170 x 185 [7.1 x 6.7 x 7.3]	10 [22]
5300	LU3-055	S7FH6	240 x 170 x 216 [9.4 x 6.7 x 8.5]	16 [35.3]
5370	LU3-055	S7FH6	240 x 170 x 216 [9.4 x 6.7 x 8.5]	16 [35.3]
ADL300-...-2M, 1ph				
1011	For information please contact the Gefran Sales Office.			
1015				
2022				
2030				
3040				
3055				

Note! With the inverter operated at the rated current and a frequency of 50 Hz, the output chokes cause a voltage drop of approx. 2% of the output voltage.

5.4 External braking resistors (optional)

Recommended combinations for use with internal braking unit.

Table 5.4.1: Recommended combination ADL...-AC and ADL...-BR series

Size	List and technical data of standard external resistors									
	Resistor type	Code	Q.ty	Max. overload, 1" - service 10% E_{BR} (kJ)	Max. overload, 30" - service 25% E_{BR} (kJ)	P_{NBR} (W)	R_{BR} (Ω)	Housing	Dimensions: Width x Height x Depth (mm)	Weight (kg)
ADL300-...-4, 3ph										
1040	RFPD 750 DT 100R	S8SY4	1	7.5	38	750	100	IP44	200 x 70 x 106	1.7
1055	RFPR 750 D 68R	S8SZ3	1	7.5	38	750	68	IP44	245 x 75 x 100	2.7
2075	RFPR 750 D 68R	S8SZ3	1	7.5	28	750	68	IP44	245 x 75 x 100	2.7
2110	RFPR 1200 D 49R	S8SZ4	1	7.5	28	1200	49	IP44	310 x 75 x 100	4.2
3150	RFPR 1900 D 28R	S8SZ5	1	12	43	1500	28	IP44	365 x 75 x 100	4.2
3185	BRT4K0-15R4	S8T00G	1	40	150	4000	15.4	IP20	625 x 100 x 250	7.0
3220	BRT4K0-15R4	S8T00G	1	40	150	4000	15.4	IP20	625 x 100 x 250	7.0
4300	BRT4K0-11R6	S8T00H	1	40	150	4000	11.6	IP20	625 x 100 x 250	7.0
4370	BRT4K0-11R6	S8T00H	1	40	150	4000	11.6	IP20	625 x 100 x 250	7.0
4450	BRT8K0-7R7	S8T00I	1	40	150	8000	7.7	IP20	625 x 165 x 250	10.0
5550	BRT8K0-7R7	S8T00I	1	40	150	8000	7,7	IP20	625 x 165 x 250	10.0
5750	External braking unit (BUy series, optional)									
ADL300-...-2T, 3ph										
2055	RFPR 1200 D 49R	S8SZ4	1	12	43	1200	49	IP44	310 x 75 x 100	4.2
3075	RFPR 1900 D 28R	S8SZ5	1	19	75	1500	28	IP44	365 x 75 x 100	4.2
3110	BRT4K0-15R4	S8T00G	1	40	150	4000	15.4	IP20	625 x 100 x 250	7.0
4150	BRT4K0-11R6	S8T00H	1	40	150	4000	11.6	IP20	625 x 100 x 250	7.0
4185	BRT4K0-11R6	S8T00H	1	40	150	4000	11.6	IP20	625 x 100 x 250	7.0
4220	BRT8K0-7R7	S8T00I	1	40	150	8000	7.7	IP20	625 x 165 x 250	10.0
5300	BRT8K0-7R7	S8T00I	1	40	150	8000	7.7	IP20	625 x 165 x 250	10.0
5370	External braking unit (BUy series, optional)									
ADL300-...-2M, 1ph										
1011	RF 220 T 100R	S8T0CE	1	1.5	11	200	100	IP44	300 x 27 x 36	0.5
1015	RF 220 T 68R	S8T00T	1	1.5	11	200	68	IP44	300 x 27 x 36	-
2022	RF 300 D 34R	S8T0CH	1	2.5	24	300	34	IP44	260 x 38 x 106	1.4
2030	RF 300 D 34R	S8T0CH	1	2.5	24	300	34	IP44	260 x 38 x 106	1.4
3040	RFPD 750 DT 26R	S8T0CZ	1	4.5	43	750	26	IP44	200 x 70 x 106	1.7
3055	RFPD 750 DT 26R	S8T0CZ	1	4.5	43	750	26	IP44	200 x 70 x 106	1.7

P_{NBR} Braking resistor rated power
R_{BR} Braking resistor ohmic value
E_{BR} Maximum energy that can be dissipated on the resistor

Warning!

Braking resistors may be subject to unexpected overloads due to faults.

Resistors MUST be protected using thermal cutouts. These devices must not interrupt the circuit in which the resistor is inserted but their auxiliary contact must cut off the power supply to the power section of the drive. If the resistor requires a protection contact, this must be used together with that of the thermal cutout.

A la suite de pannes, les résistances de freinage peuvent être sujettes à des surcharges imprévues. La protection des résistances au moyen de dispositifs de protection thermique est absolument capitale. Ces dispositifs ne doivent pas interrompre le circuit qui abrite la résistance, mais leur contact auxiliaire doit couper l'alimentation du côté puissance du drive. Si la résistance prévoit un contact de protection, ce dernier doit être utilisé conjointement à celui du dispositif de protection thermique.

5.5 EMC Filter (optional)

The ADL300-...-F-4/2T inverters are equipped with an internal EMI filter, optional external filters are reported in the table.

Size	Type	Code	Conducted emissions according to / Motor cable length	Dimensions: Width x Height x Depth (mm)	Weight (kg)
ADL300-... , 3ph					
1040	EMI-FTF-480-7	S7GHL	EN 12015 / 10 m	190 x 40 x 70	0.6
1055	EMI-FTF-480-16	S7GHO		250 x 45 x 70	0.8
2075	EMI-FTF-480-16	S7GHO		250 x 45 x 70	0.8
2110	EMI-FTF-480-30	S7GHP	EN 12015 / 10 m	250 x 50 x 85	1
3150	EMI-FTF-480-30	S7GHP		250 x 50 x 85	1
3185	EMI-FTF-480-42	S7GOA		310 x 50 x 85	1.3
3220	EMI-FTF-480-42	S7GOA		310 x 50 x 85	1.3
4300	EMI-FTF-480-42	S7GOA		310 x 50 x 85	1.3
4370	EMI FTF-480-55	S7GOB		250 x 85 x 90	1.9
4450	EMI FTF-480-75	S7GOC		270 x 80 x 135	2.6
5550	EMI FTF-480-75	S7GOC		270 x 80 x 135	2.6
5750	EMI FTF-480-100	S7GOD		270 x 90 x 150	3
ADL300-...-2T, 3ph					
2055	EMI-FTF-480-30	S7GHP	EN 12015 / 10 m	250 x 50 x 85	1
3075	EMI-FTF-480-30	S7GHP		250 x 50 x 85	1
3110	EMI-FTF-480-42	S7GOA		310 x 50 x 85	1.3
4150	EMI-FTF-480-42	S7GOA		310 x 50 x 85	1.3
4185	EMI FTF-480-55	S7GOB		250 x 85 x 90	1.9
4220	EMI FTF-480-75	S7GOC		270 x 80 x 135	2.6
5300	EMI FTF-480-75	S7GOC		270 x 80 x 135	2.6
5370	EMI FTF-480-100	S7GOD		270 x 90 x 150	3
ADL300-...-2M, 1ph					
1011	EMI-FN2410-230-25	S7EMI1	EN12015 / 10m	130 x 93 x 76	-
1015	EMI-FN2410-230-25	S7EMI1		130 x 93 x 76	-
2022	EMI-FN2410-230-32	S7EMI2		130 x 93 x 76	-
2030	EMI-FN2410-230-32	S7EMI2	EN 12015 / 10 m	130 x 93 x 76	-
3040	EMI-FN2410-230-45	S7EMI3		130 x 93 x 76	-
3055	EMI-FN2410-230-60	S7EMI4		130 x 93 x 76	-

6 - Mechanical installation

Caution

The Drive must be mounted on a wall that is constructed of heat resistant material. While the Drive is operating, the temperature of the Drive's cooling fins can rise to a temperature of 158° F (70°C).

Le drive doit être monté sur un mur construit avec des matériaux résistants à la chaleur. Pendant le fonctionnement du drive, la température des ailettes du dissipateur thermique peut arriver à 70°C (158° F).

Because the ambient temperature greatly affects Drive life and reliability, do not install the Drive in any location that exceeds the allowable temperature.

Étant donné que la température ambiante influe sur la vie et la fiabilité du drive, on ne devrait pasinstaller le drive dans des places ou la temperature permise est dépassée.

Be sure to remove the desicant dryer packet(s) when unpacking the Drive. (If not removed these packets may become lodged in the fan or air passages and cause the Drive to overheat).

Lors du déballage du drive, retirer le sachet déshydraté. (Si celui-ci n'est pas retiré, il empêche la ventilation et provoque une surchauffe du drive).

Protect the device from impermissible environmental conditions (temperature, humidity, shock etc.).

Protéger l'appareil contre des effets extérieurs non permis (température, humidité, chocs etc.).

6.1 Maximum inclination and assembly clearances

The inverters must be mounted in such a way that air can flow freely around them, **see paragraph 4.8 Cooling**.

Maximum angle of inclination	30° (referred to vertical position)
Minimum top and bottom distance	150 mm
Minimum free space to the front	25 mm
Minimum distance between drives	25 mm
Minimum distance to the side with the cabinet	25 mm

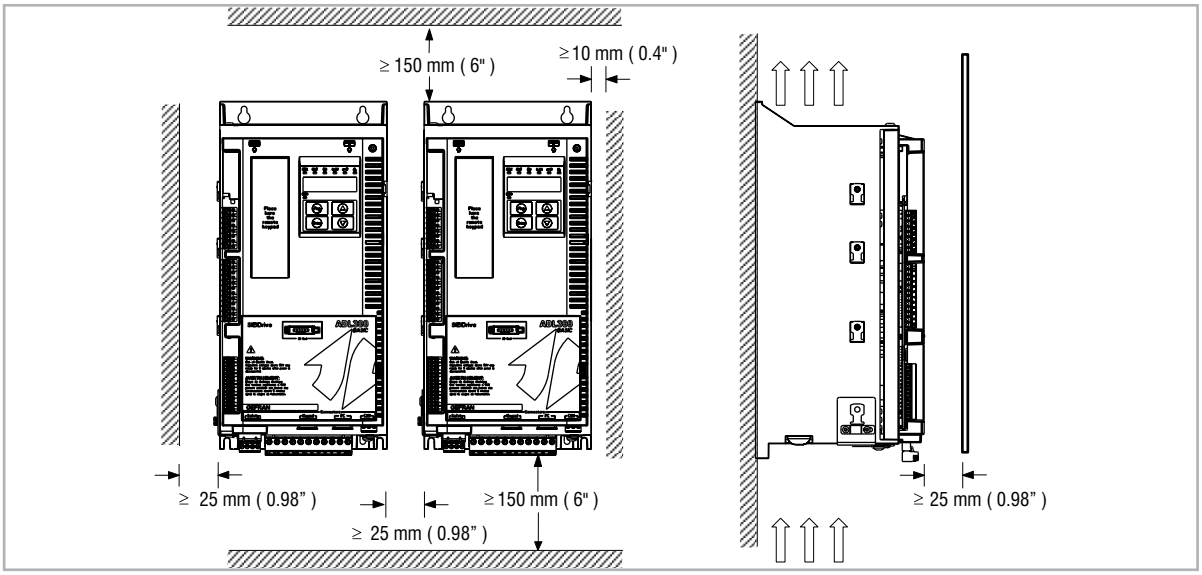

6.2 Fastening positions

Fissaggio a muro • Wall mounting • Fixation mural • Wandmontagee • Fijación en pared

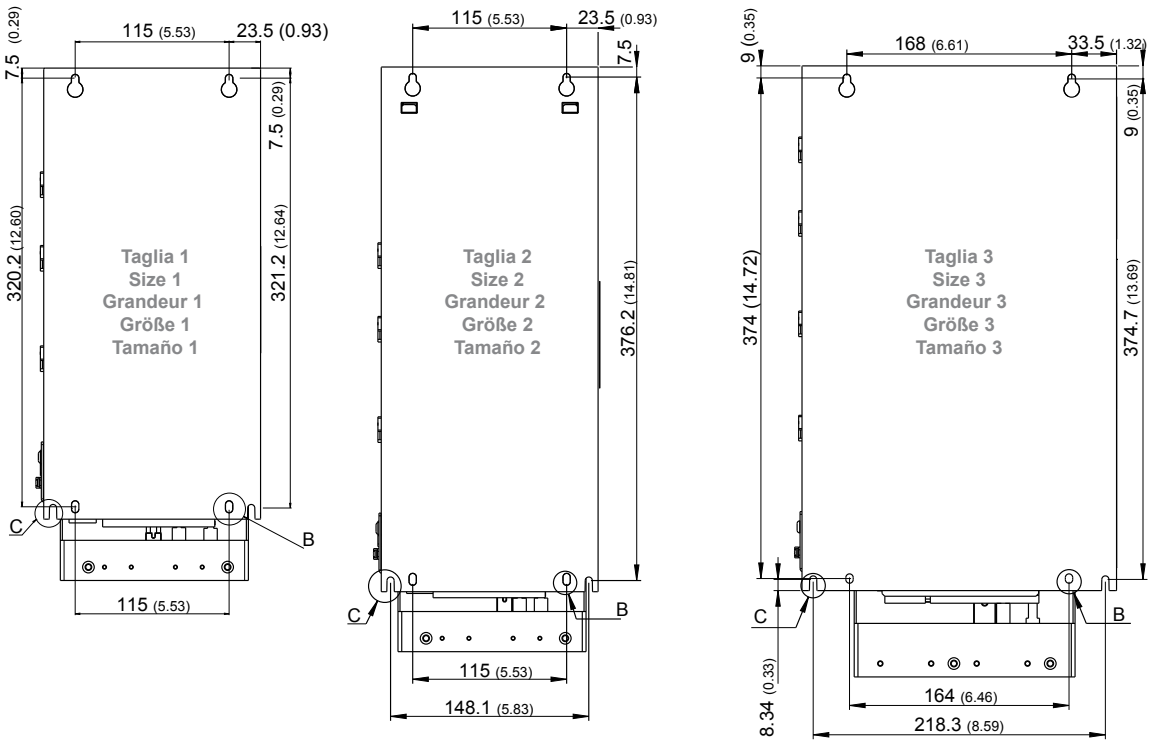

Fissaggio a muro • Wall mounting • Fixation mural • Wandmontagee • Fijación en pared

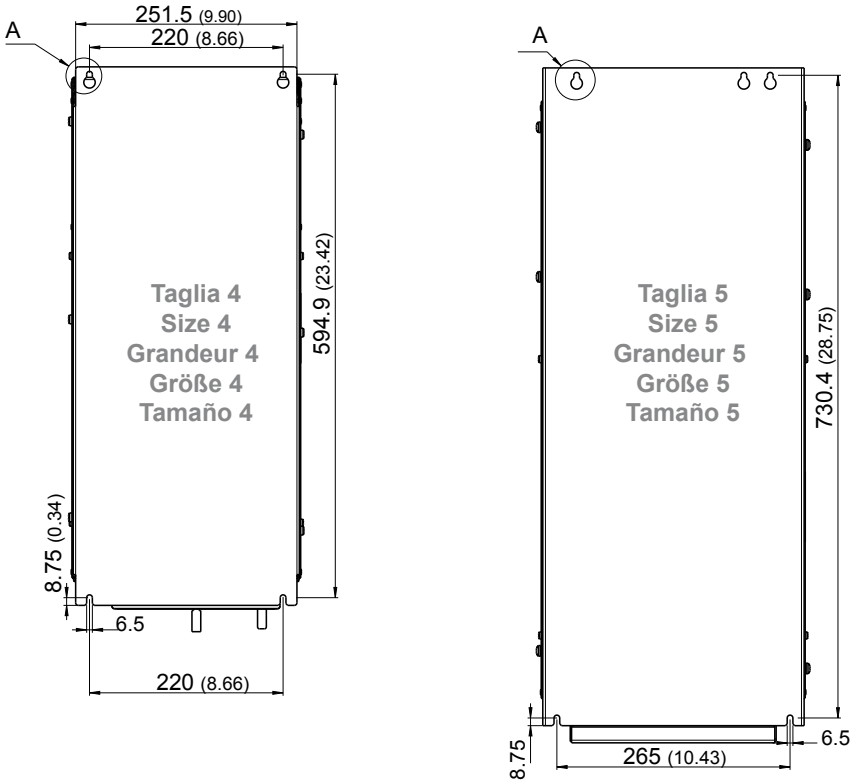

Taglie • Sizes • Grandeurs • Größen • Tamaños :

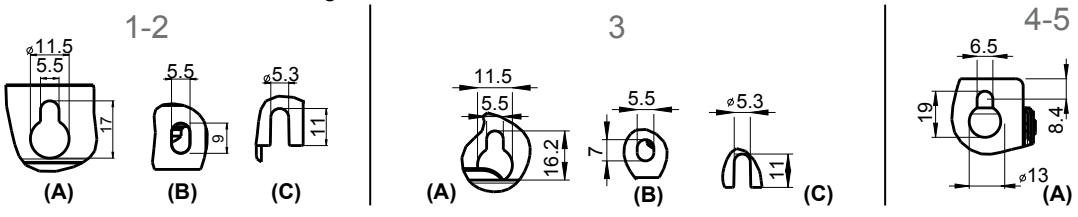

	Recommended screws for fastening
Size 1 (ADL300...-1...)	4 x M5 x 12 mm screws + Grover (spring-lock) washer + flat washer
Size 2 (ADL300...-2...)	4 x M5 x 12 mm screws + Grover (spring-lock) washer + flat washer
Size 3 (ADL300...-3...)	4 x M5 x 12 mm screws + Grover (spring-lock) washer + flat washer
Size 4 (ADL300...-4...)	4 x M6 x 16 mm screws + Grover (spring-lock) washer + flat washer
Size 5 (ADL300...-5...)	5 x M6 x 16 mm screws + Grover (spring-lock) washer + flat washer

Note!

Other dimensions **see chapter 4.9** Weights and dimensions.

7 - Wiring Procedure

Warning!

Adjustable frequency drives are electrical apparatus for use in industrial installations. Parts of the Drives are energized during operation. The electrical installation and the opening of the device should therefore only be carried out by qualified personnel. Improper installation of motors or Drives may therefore cause the failure of the device as well as serious injury to persons or material damage. Drive is not equipped with motor overspeed protection logic other than that controlled by software. Follow the instructions given in this manual and observe the local and national safety regulations applicable.

Les drives à fréquence variable sont des dispositifs électriques utilisés dans des installations industriels. Une partie des drives sont sous tension pendant l'operation. L'installation électrique et l'ouverture des drives devrait être executé uniquement par du personel qualifié. De mauvaises installations de moteurs ou de drives peuvent provoquer des dommages materiels ou blesser des personnes. On doit suivir les instructions donneés dans ce manuel et observer les régles nationales de sécurité.

Replace all covers before applying power to the Drive. Failure to do so may result in death or serious injury.

Remettre tous les capots avant de mettre sous tension le drive. Des erreurs peuvent provoquer de sérieux accidents ou même la mort.

Warning!

The drive must always be grounded. If the drive is not connected correctly to ground, extremely hazardous conditions may be generated that may result in death or serious injury.

Le drive doit toujours être raccordé au système de mise à la terre. Un mauvais raccordement du drive au système de mise à la terre peut se traduire par des conditions extrêmement dangereuses susceptibles d'entraîner le décès ou de graves lésions corporelles.

Never open the device or covers while the AC Input power supply is switched on. Minimum time to wait before working on the terminals or inside the device is listed in section 4.6.

Ne jamais ouvrir l'appareil lorsqu'il est suns tension. Le temps minimum d'attente avant de pouvoir travailler sur les bornes ou bien à l'intérieur de l'appareil est indiqué dans la section 4.6.

Do not touch or damage any components when handling the device. The changing of the isolation gaps or the removing of the isolation and covers is not permissible.

Manipuler l'appareil de façon à ne pas toucher ou endommager des parties. Il n'est pas permis de changer les distances d'isolement ou bien d'enlever des matériaux isolants ou des capots.

Caution

Do not connect power supply voltage that exceeds the standard specification voltage fluctuation permissible. If excessive voltage is applied to the Drive, damage to the internal components will result.

Ne pas raccorder de tension d'alimentation dépassant la fluctuation de tension permise par les normes. Dans le cas d' une alimentation en tension excessive, des composants internes peuvent être endommagés.

<u>Operation with Residual Current Device (Differential switch)</u>

If an RCD (also known as an RCCB or ELCB) is installed, it must have a high leakage current (≥ 300 mA).

RCD: Residual Current Device
RCCB: Residual Current Circuit Breaker
ELCB: Earth Leakage Circuit Breaker

Note:

The residual current operated circuit-breakers used must provide protection against direct-current components in the fault current and must be suitable for briefly suppressing power pulse current peaks. It is recommended to protect the frequency inverter by fuse separately.

The regulations of the individual country (e.g. VDE regulations in Germany) and the regional power suppliers must be observed!

Les RCD utilisés doivent assurer la protection contre les composants à courant continu présents dans le courant de défaut et doivent être capables de supprimer des crêtes de courant en peu de temps. Il est recommandé de protéger séparément l'onduleur au moyen de fusibles.

Respecter la réglementation des pays concernés (par exemple, les normes VDR en Allemagne) et des fournisseurs locaux d'énergie électrique.

Caution

Functioning of the Drive without a ground connection is not permitted. To avoid disturbances, the armature of the motor must be grounded using a separate ground connector from those of other appliances.

Défense de faire fonctionner le drive sans qu'il y ait eu raccordement de mise à la terre préalable. Pour éviter les perturbations, la carcasse du moteur doit être mise à la terre à l'aide d'un raccord de mise à la masse séparé de ceux des autres appareils.

The grounding connector shall be sized in accordance with the NEC or Canadian Electrical Code. The connection shall be made by a UL listed or CSA certified closed-loop terminal connector sized for the wire gauge involved. The connector is to be fixed using the crimp tool specified by the connector manufacturer.

Le raccordement devrait être fait par un connecteur certifié et mentionné à boucle fermé par lesnormes CSA et UL et dimensionné pour l'épaisseur du cable correspondant. Le connecteur doit êtrefixé a l'aide d'un instrument de serrage specifié par le producteur du connecteur.

Do not perform a megger test between the Drive terminals or on the control circuit terminals.

Ne pas exécuter un test megger entre les bornes du drive ou entre les bornes du circuit de contrôle.

No voltage should be connected to the output of the drive (terminals U2, V2 W2). The parallel connection of several drives via the outputs and the direct connection of the inputs and outputs (bypass) are not permissible.

Aucune tension ne doit être appliquée sur la sortie du convertisseur (bornes U2, V2 et W2). Il n'est pas permis de raccorder la sortie de plusieurs convertisseurs en parallèle, ni d'effectuer une connexion directede l'entrée avec la sortie du convertisseur (Bypass).

The electrical commissioning should only be carried out by qualified personnel, who are also responsible for the provision of a suitable ground connection and a protected power supply feeder in accordance with the local and national regulations. The motor must be protected against overloads.

La mise en service électrique doit être effectuée par un personnel qualifié. Ce dernier est responsable del'existence d'une connexion de terre adéquate et d'une protection des câbles d'alimentation selon les prescriptions locales et nationales. Le moteur doit être protégé contre la surcharge

If the Drives have been stored for longer than two years, the operation of the DC link capacitors may be impaired and must be "reformed". Before commissioning devices that have been stored for long periods, connect them to a power supply for two hours with no load connected in order to regenerate the capacitors, (the input voltage has to be applied without enabling the drive).

En cas de stockage des variateurs pendant plus de deux ans, il est conseillé de contrôler l'état des condensateurs CC avant d'en effectuer le branchement. Avant la mise en service des appareils, ayant été stockés pendant long temps, il faut alimenter variateurs à vide pendant deux heures, pour régénérer les condensateurs : appliquer une tension d'alimentation sans actionner le variateur.

7.1 Power section

7.1.1 Cable cross-sections

Size ADL300-...-4, 3ph	Terminals: L1 - L2 - L3 - BR - C1 - C - D - U - V - W - EM				
	Maximum cable cross-section (flexible conductor)		Recommended stripping	Recommended terminal	Tightening torque (min)
	(mm^2)	AWG	(mm)	(mm)	(Nm)
1040	4	10	10	None / pin	0.7 ... 0.8
1055	4	10	10	None / pin	0.7 ... 0.8
2075	6	8	10	None / pin	0.7 ... 0.8
2110	6	8	10	None / pin	0.7 ... 0.8
3150	16	6	14	None / pin	1.7 ... 1.8
3185	16	6	14	None / pin	1.7 ... 1.8
3220	16	6	14	None / pin	1.7 ... 1.8
	Terminals: L1 - L2 - L3 - BR1 - BR2 - C - D - U - V - W				
4300	35	2	18	None / pin	2.4 ... 4.5
4370	35	2	18	None / pin	2.4 ... 4.5
4450	35	2	18	None / pin	2.4 ... 4.5
5550	95 (BR1/BR2=50)	4/0 (BR1/BR2=1/0)	23 (BR1/BR2=27)	None / pin	14 (BR1/BR2=10)
5750	95	4/0	23	None / pin	14
	Terminal: EM				
4300	6	10	10	None / pin	0.7 ... 0.8
4370	6	10	10	None / pin	0.7 ... 0.8
4450	6	10	10	None / pin	0.7 ... 0.8
5550	6	10	10	None / pin	0.7 ... 0.8
5750	6	10	10	None / pin	0.7 ... 0.8

Note!

The power terminal strip is extractable on sizes 1040 ... 3220. The EM terminal strip is extractable on all mechanical sizes.

Size ADL300-...-4, 3ph	Terminals: ⏚ on structural work				
	Cable cross-section		Lock screw diameter	Recommended terminal	Tightening torque (min)
	(mm^2)	AWG	(mm)	(mm)	(Nm)
1040 ... 3220	Same as the maximum cross-section used for the power terminal strip		M5	Eyelet - Fork	6
4300	16	6	M6	Eyelet - Fork	10
4370	16	6	M6	Eyelet - Fork	10
4450	16	6	M6	Eyelet - Fork	10
5550	50	1/0	M6	Eyelet - Fork	10
5750	50	1/0	M6	Eyelet - Fork	10

Size ADL300-...-2T, 3ph	Terminals: L1 - L2 - L3 - BR - C1 - C - D - U - V - W - EM				
	Maximum cable cross-section (flexible conductor)		Recommended stripping	Recommended terminal	Tightening torque (min)
	(mm^2)	AWG	(mm)	(mm)	(Nm)
2055	6	8	10	None / pin	0.7 ... 0.8
3075	16	6	14	None / pin	1.7 ... 1.8
3110	16	6	14	None / pin	1.7 ... 1.8
	Terminals: L1 - L2 - L3 - BR1 - BR2 - C - D - U - V - W				
4150	35	2	18	None / pin	2.4 ... 4.5
4185	35	2	18	None / pin	2.4 ... 4.5
4220	35	2	18	None / pin	2.4 ... 4.5
5300	95 (BR1/BR2=50)	4/0 (BR1/BR2=1/0)	23 (BR1/BR2=27)	None / pin	14 (BR1/BR2=10)
5370	95	4/0	23	None / pin	14
	Terminal: EM				
4150	6	10	10	None / pin	0.7 ... 0.8
4185	6	10	10	None / pin	0.7 ... 0.8
4220	6	10	10	None / pin	0.7 ... 0.8
5300	6	10	10	None / pin	0.7 ... 0.8
5370	6	10	10	None / pin	0.7 ... 0.8

Note!

The power terminal strip is extractable on sizes 2055 ... 3110. The EM terminal strip is extractable on all mechanical sizes.

Size ADL300-...-2T, 3ph	Terminals: ⏚ on structural work				
	Cable cross-section		Lock screw diameter	Recommended terminal	Tightening torque (min)
	(mm^2)	AWG	(mm)	(mm)	(Nm)
2055 ... 3110	Same as the maximum cross-section used for the power terminal strip		M5	Eyelet - Fork	6
4150	16	6	M6	Eyelet - Fork	10
4185	16	6	M6	Eyelet - Fork	10
4220	16	6	M6	Eyelet - Fork	10
5300	50	1/0	M6	Eyelet - Fork	10
5370	50	1/0	M6	Eyelet - Fork	10

Size ADL300-...-2M-... , 1ph	Morsetti: L1 - N - BR - C1 - C - D - U - V - W - EM				
	Maximum cable cross-section (flexible conductor)		Recommended stripping	Recommended terminal	Tightening torque (min)
	(mm^2)	AWG	(mm)	(mm)	(Nm)
1011	4	10	10	None / pin	0.5 ... 0.6
1015	4	10	10	None / pin	0.5 ... 0.6
2022	6	8	10	None / pin	1.2 ... 1.5
2030	6	8	10	None / pin	1.2 ... 1.5
3040	16	6	14	None / pin	1.5 ... 1.7
3055	16	6	14	None / pin	1.5 ... 1.7

Size ADL300-...-2M-... , 1ph	Terminals: ⏚ on structural work				
	Cable cross-section		Lock screw diameter	Recommended terminal	Tightening torque (min)
	(mm^2)	AWG	(mm)	(mm)	(Nm)
1011 ... 3055	Same as the maximum cross-section used for the power terminal strip		M5	Eyelet - Fork	6

Note!

The minimum cross-section for both ground connections must comply with EN61800-5-1 prescriptions. Always ground both points on structural steel.

7.1.2 Connection of shielding (recommended)

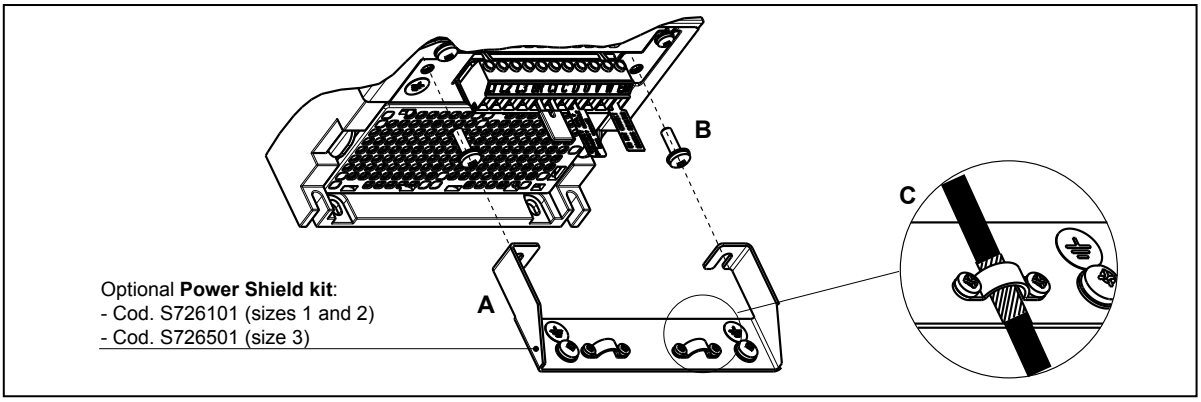

Loosen the two screws (B), put the metal support (A) (optional, POWER SHIELD KIT) in place and screw down tightly. Fasten the power cable shield to the omega sections (C) as illustrated in the figure.

• Sizes 4 and 5 : for these sizes the metal support (A) is not provided. Cable shielding must be provided by the installer.

7.1.3 EMC guide line

Warning!

In a domestic environment, this product may cause radio inference, in which case supplementary mitigation measures may be required.

Attention

The converters are protected in order to be used in industrial environments where, for immunity purposes, large amounts of electromagnetic interference can occur. Proper installation practices will ensure safe and trouble-free operation. If you encounter problems, follow the guidelines which follow.

- Check for all equipment in the cabinet are well grounded using short, thick grounding cable connected to a common star point or busbar. Better solution is to use a conductive mounting plane and use that as EMC ground reference plane.
- Flat conductors, for EMC grounding, are better than other type because they have lower impedance at higher frequencies.
- Make sure that any control equipment (such as a PLC) connected to the inverter is connected to the same EMC ground or star point as the inverter via a short thick link.
- Connect the return ground from the motors controlled by the drives directly to the ground connection (⏚) on the associated inverter.
- Separate the control cables from the power cables as much as possible, using separate trunking, if necessary at 90º to each other.
- Whenever possible, use screened leads for the connections to the control circuitry
- Ensure that the contactors in the cubicle are suppressed, either with R-C suppressors for AC contactors or 'flywheel' diodes for DC contactors fitted to the coils. Varistor suppressors are also effective. This is important when the contactors are controlled from the inverter relay.
- Use screened or armored cables for the motor connections and ground the screen at both ends using the cable clamps.
- Use power shield kit to connect shield of motor cable to drive.

Note!

For further information regarding electro-magnetic compatibility standards, according to Directive 2014/30/EC, conformity checks carried out on Gefran appliances, connection of filters and mains inductors, shielding of cables, ground connections, etc., consult the "Electro-magnetic compatibility guide" on the CD attached to this drive.

7.1.4 Block diagram of power section

This type is equipped with an EMI input filter (models ADL300.-...-F-..; except ADL300-...-2M), an AC/DC converter, a system for pre-loading DC capacitors, a DC/AC converter, a power supply unit and an integrated braking unit.
To manage emergency situations (drive power failure) the unit also envisages connection of an emergency unit between terminals EM and D.
A specific external resistor must be connected to perform the braking function.
The connection of the external braking resistor depends on the drive size:

- (1) (4) connect the resistor between terminals C and BR
- (2) connect the resistor between terminals BR1 and BR2.
- (3) an optional external BUy braking unit can be used and connected to terminals Cand D. Refer to the BUy handbook for further information.

ADL.-1040...3220-4
ADL.-2055...3110-2T

1

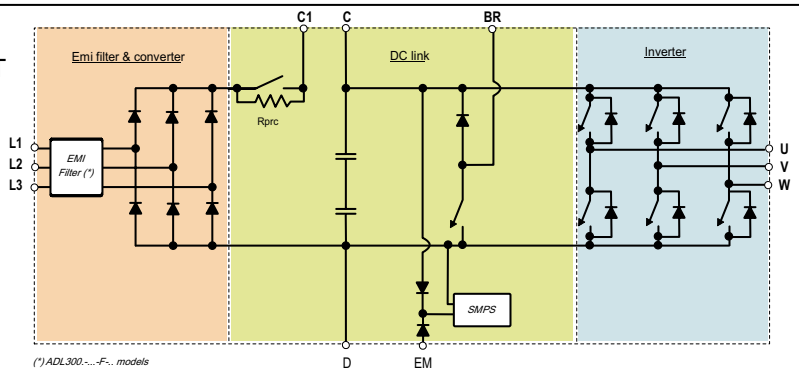

ADL.-4300...5550-4
ADL.-4150...5300-2T

2

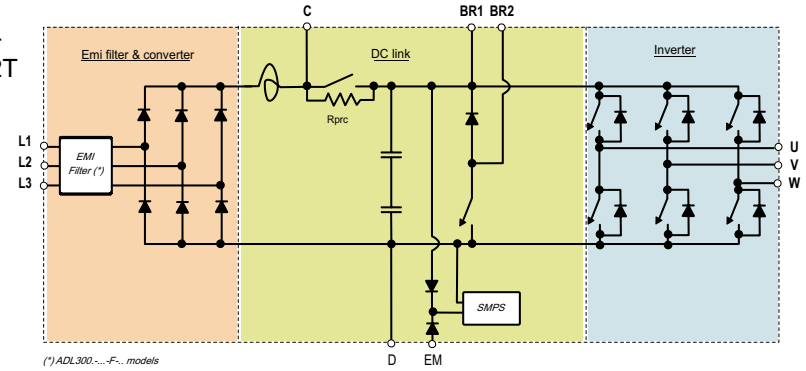

ADL.-5750-4
ADL.-5370-2T

3

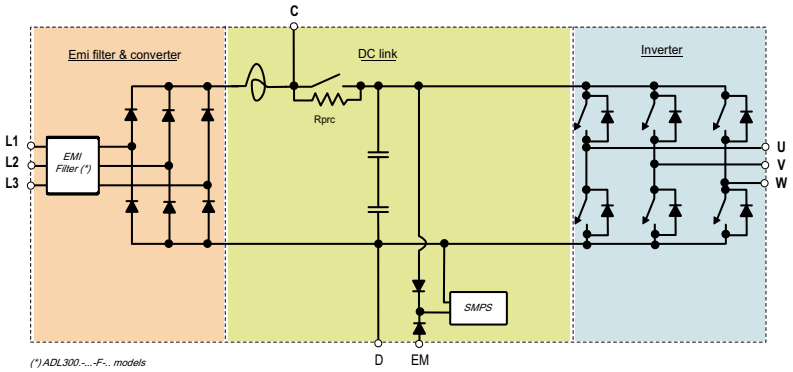

ADL.-1011...3055-2M

4

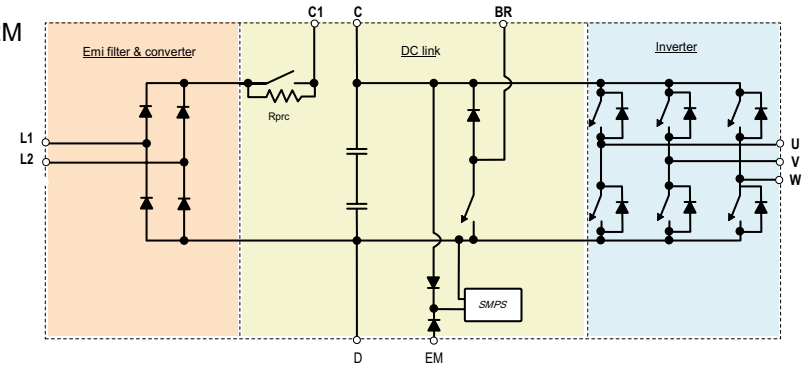

7.1.5 Internal EMC filter (standard)

The ADL300.-...-F-.. series of inverters are equipped with an internal EMI filter (optional for the ADL300-...-2M series) able to guarantee the performance levels required by EN 12015, first environment, with max 10 m of shielded motor cable.
Compliance with these requirements means the drive can be incorporated into lift systems built to EN 12015.

7.1.6 Power line connection

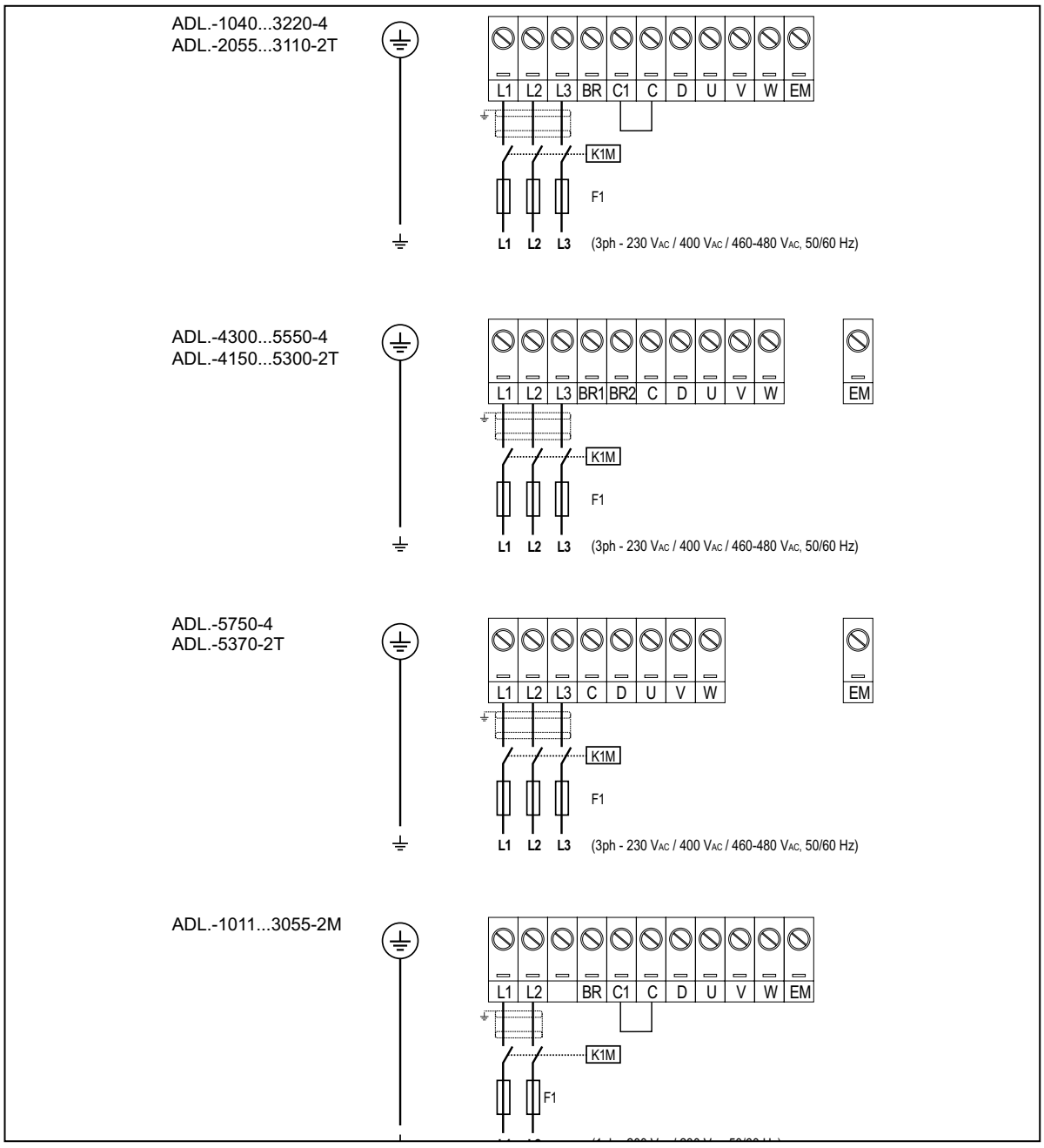

Note!

Recommended combination F1 fuses: **see paragraph 5.1.1**.

7.1.7 Connection of AC and DC chokes (optional)

(For three-phase ADL300 only). The drive can use both a three-phase choke on the AC power line and, for 4 to 22 kW drives only, a DC choke between terminals C1 and C. Refer to **chapter 5.2** for the recommended connections.
If no DC choke is used on 4 to 22 kW drives, terminals C1 and C must be bridged.

Attention

If no DC choke is used, terminals C1 and C must be bridged (sizes 1-2 e 3).

7.1.8 Motor connection

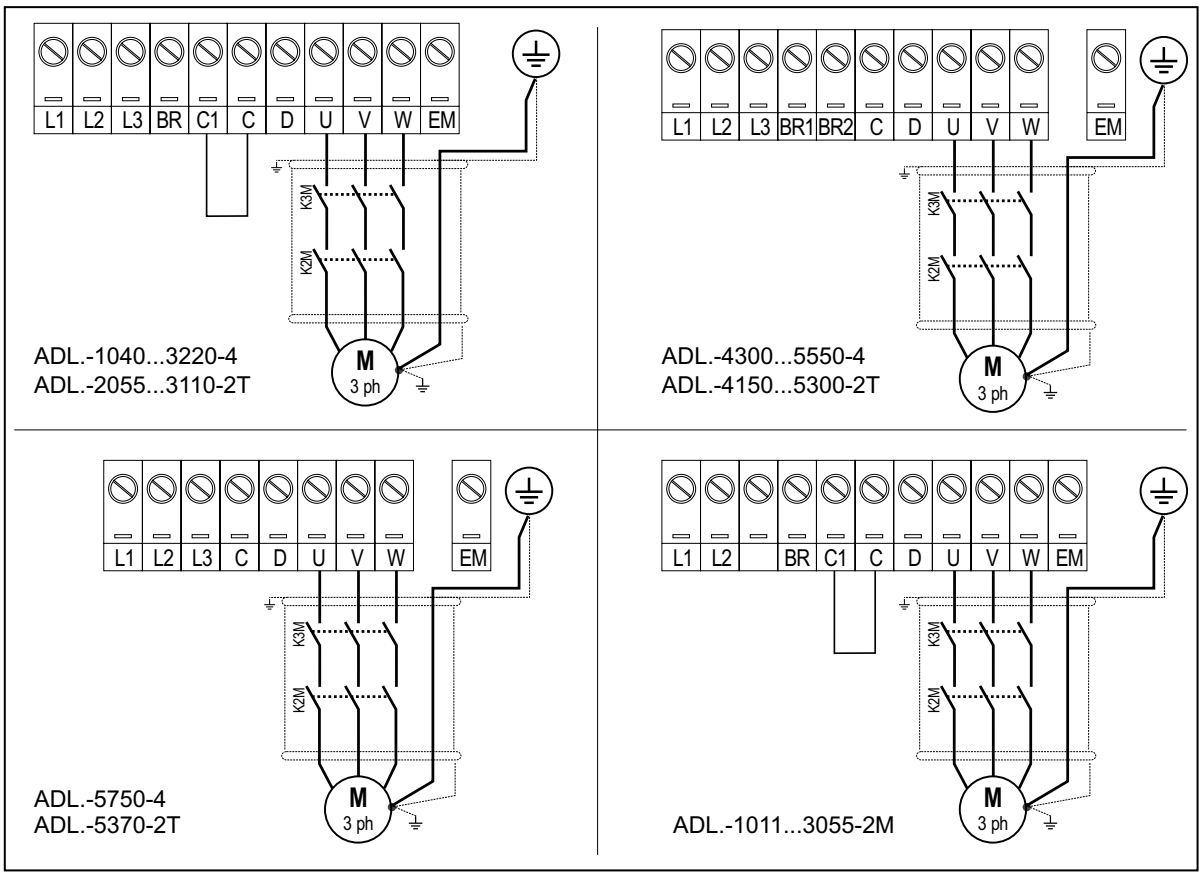

7.1.9 Connection of braking resistor (optional)

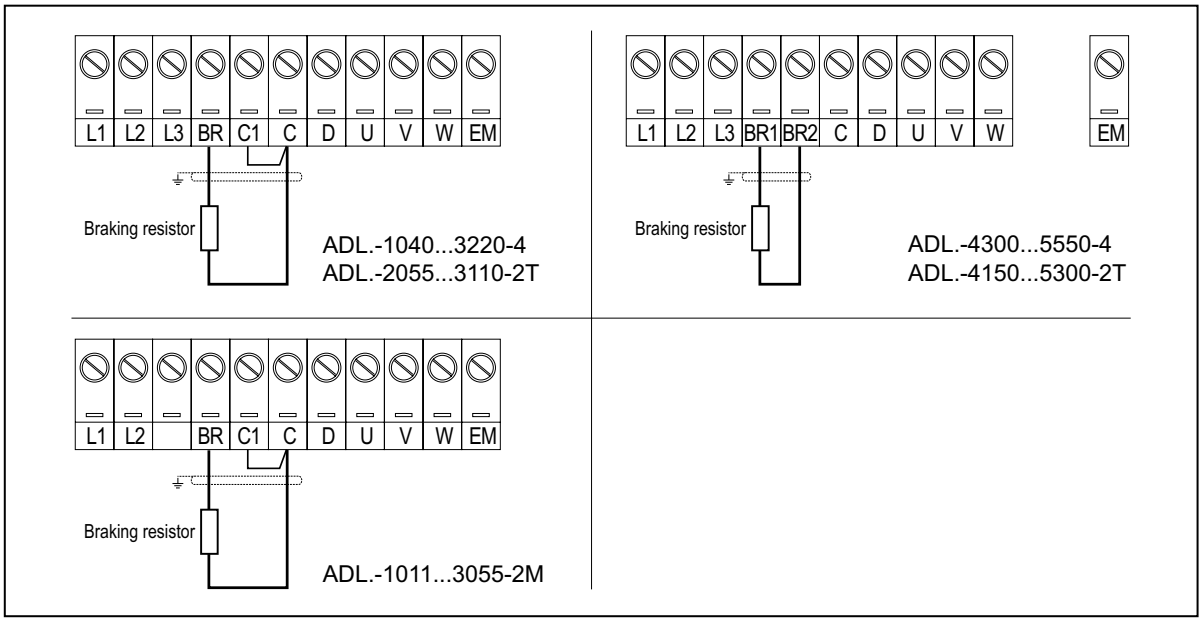

Note!

Recommended combination braking resistors: **see paragraph 5.4**.

For sizes 5750 and 5370 an optional external BUy braking unit can be used and connected to terminals Cand D. Refer to the BUy handbook for further information.

7.2 Regulation section

Figure 7.2.1-A: Identification of cards and terminals (ADL300A)

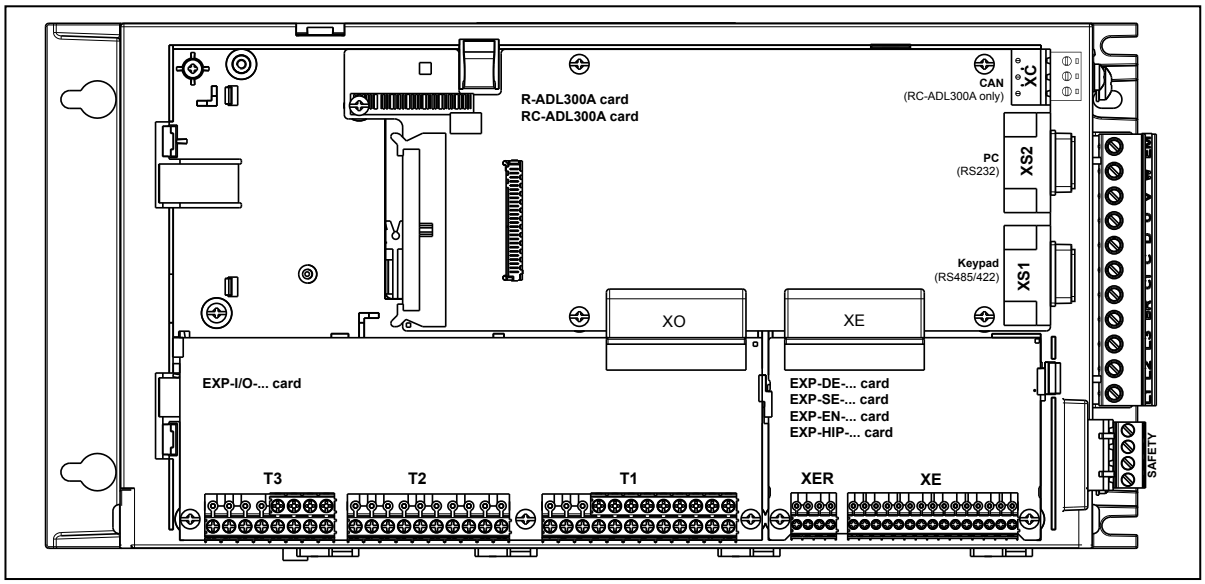

Figure 7.2.1-B: Identification of cards and terminals (ADL300B)

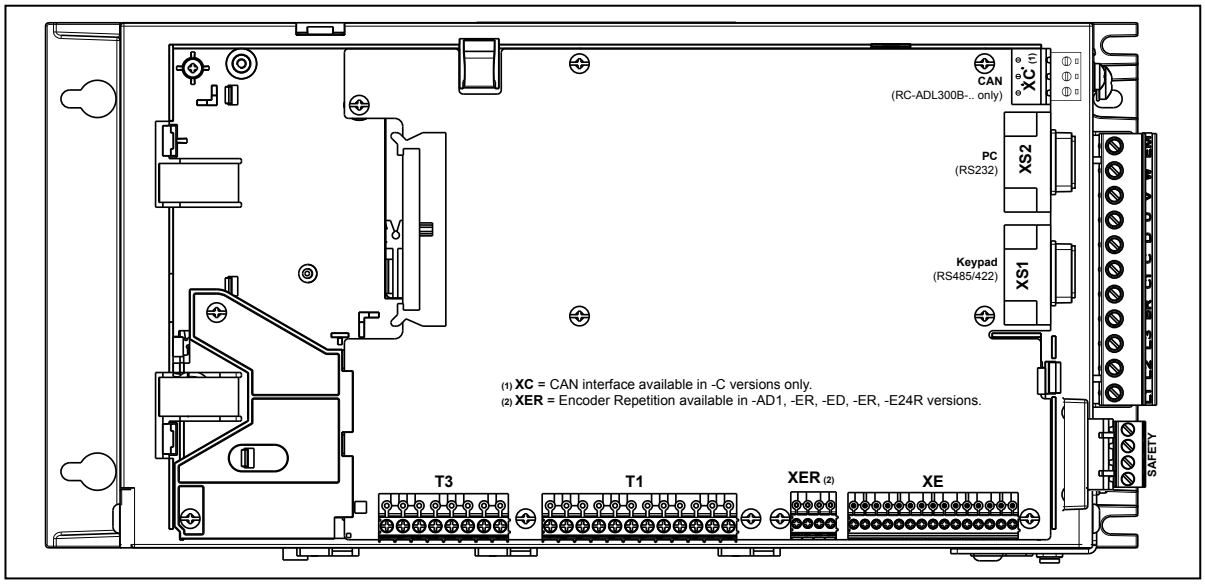

Figure 7.2.1-C: Identification of cards and terminals (ADL300B-...-AD1)

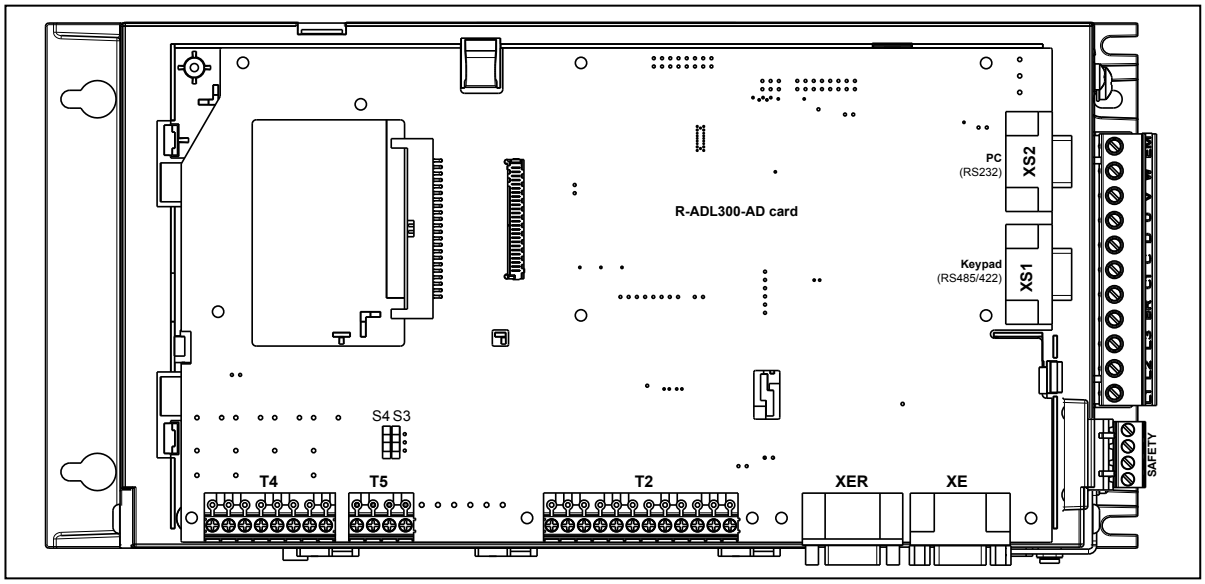

7.2.1 Cable cross-sections

Terminals	Maximum cable cross-section		Recommended stripping	Tightening torque (min)
	(mm^2)	(AWG)	(mm)	(Nm)
T5, T3, T2, T1	0.2 ... 2.5 (1 cable) 0.2 ... 0.75 (2 cables)	26 ... 12 26 ... 19	5	0.4
XER, XE	0.2 ... 1.5 (1 cable) 0.2 ... 0.5 (2 cables)	26 ... 16 26 ... 19	5	0.25
SAFETY EN+, SAFETY EN-, SAFETY OK1, SAFETY OK2	0.2 ... 2.5 (1 cable) 0.2 ... 1.5 (2 cables)	12	7	0.5

7.2.2 Connection of I/O card

Note!

All I/O card terminal strips are extractable (except EXP-IO-D5R3-F-ADL and EXP-IO-D6A4R2-F-ADL).

For more information about the EXP-IO-... cards **see section A1 of the Appendix**.

For electrical properties of analog, digital and relay inputs/outputs **see section A.2 of the Appendix**.

Figure 7.2.2-A: terminal strip and connection ADL300B-4/2T and ADL300A with EXP-IO-D8R4-ADL card

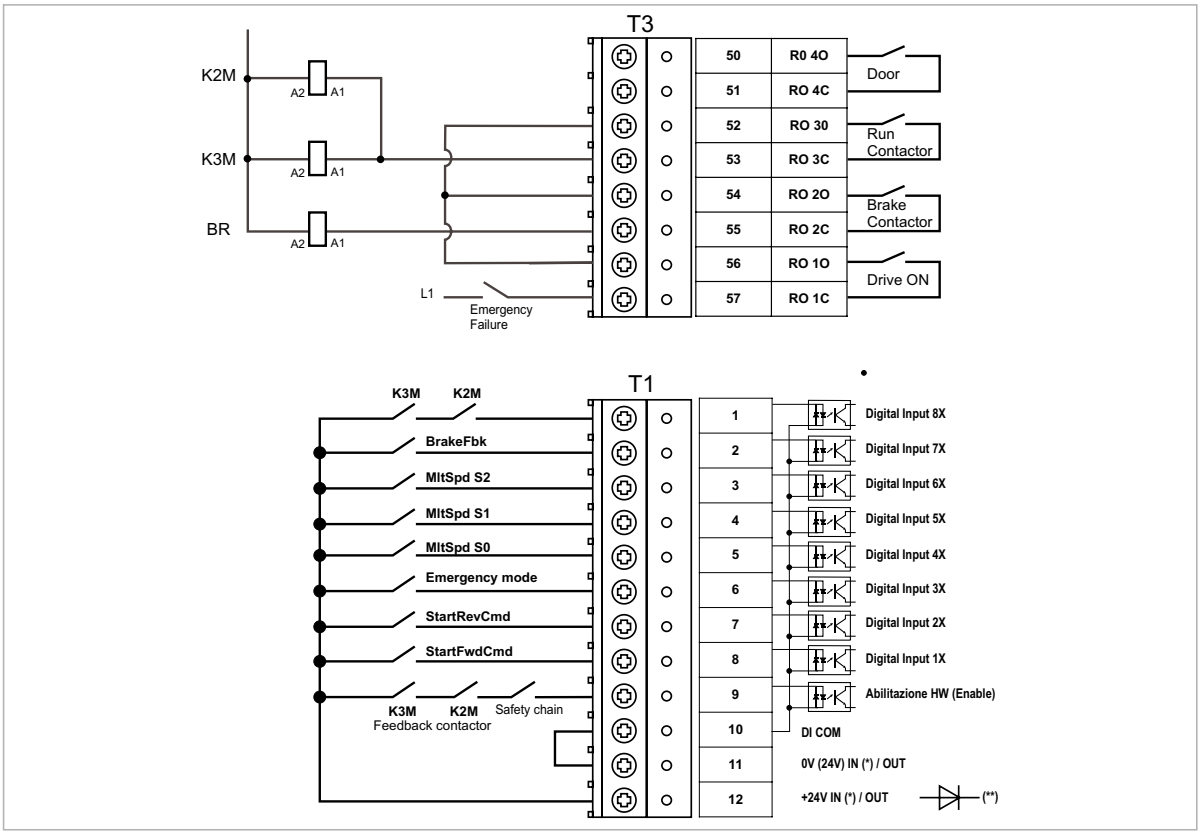

(*) Standard = +24V OUT; +24V IN/OUT versions on request;

(**) Cards with +24V external power supply (+24V IN/OUT versions) must be separated from the external power supply with an external diode. Check if the diode is already present on the external power supply.

Figure 7.2.2-B: terminal strip and connection ADL300B-2M and ADL300A with EXP-IO-D54R3-F-ADL card

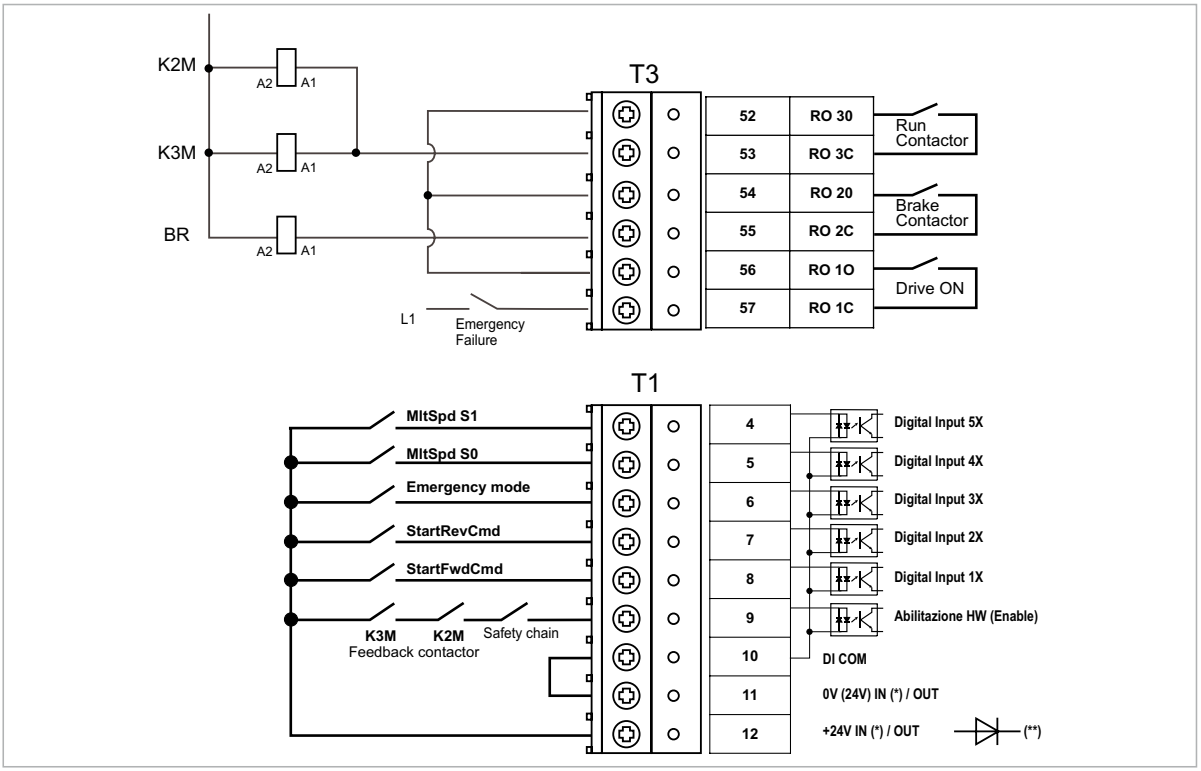

Figure 7.2.2-C: terminal strip and connection ADL300B-...-AD1

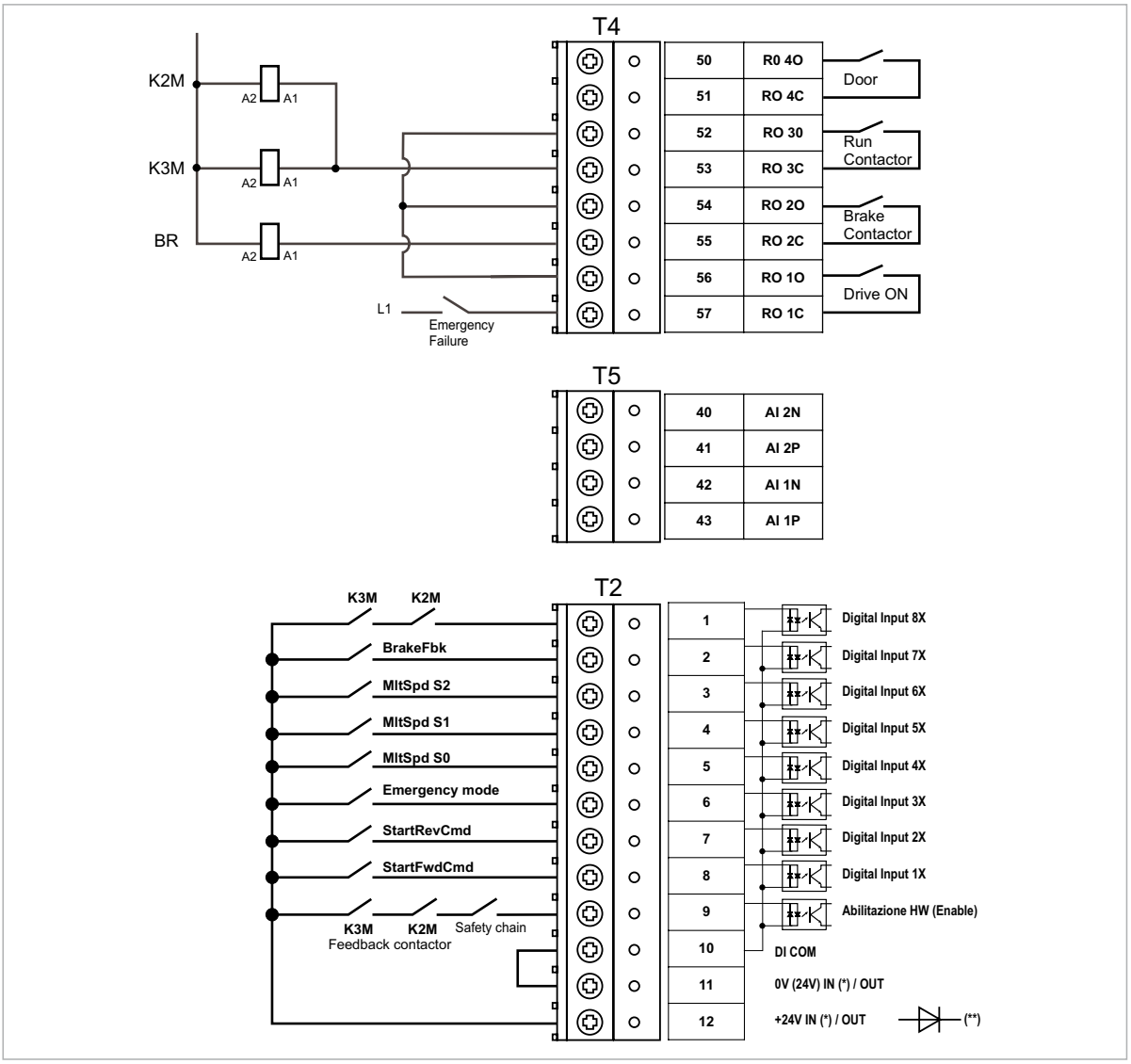

(*) Standard = +24V OUT; +24V IN/OUT versions on request;

(**) Cards with +24V external power supply (+24V IN/OUT versions) must be separated from the external power supply with an external diode. Check if the diode is already present on the external power supply.

Figure 7.2.3: Recommended card wiring

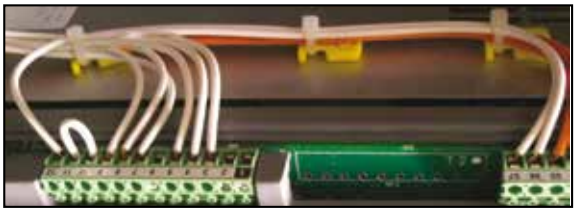

7.2.3 Feedback Connection

This section describes the feedback connections for the ADL300B series.
For the ADL300A series, see section A3 of the Appendix.

Note! All terminal boards are extractable.

Figure 7.2.4: Connection of shielding (recommended)

Note! The indicated connection is not valid for ADL300B-...-AD1: in this model, the shield must be connected to the VGA connector shell.

Attention

Technical data and connections for the most common encoder types are shown below.

See the table on page 14 to check which encoders can be connected to your model ADL300B.

(1) Connection SinCos encoder + 2 Freeze (SESC)

Technical specification:

Channels	A+ A-, B+ B-, Z+ Z-, Sin+ Sin-, Cos+ Cos-, differential Management of loss of encoder signals.
Max frequency	200 kHz (check the number of encoder impulses according to the maximum speed)
Number of impulses	min 128, max 16384 (default 1024)
Electrical interface	Channels A/B/Sin/Cos 0.6 V ≤ Vpp ≥ 1.2 V (typ. 1.0 V) – Channel Z* 0.2 V ≤ Vpp ≥ 0.8 V
Load capacity	Channels A/B/Z* 8 mA @ 1.0 Vpp (Zin 120Ω) Channels Sin/Cos 1 mA @ 1.0 Vpp (Zin 1kΩ)
Programmable internal power supply	min +5.2 V, max +6.1 V (default + 5.2 V) – Imax 150 mA. The internal power supply of the encoder can be selected from the keypad (ENCODER CONFIG menu, parameter Encoder supply (PAR 2102) to balance the loss of voltage due to the length of the encoder cable and load current. PAR 2102 Encoder supply range: min=5.2V, max= 6.1V, step of 0.1V; default=5.2V. The encoder supply voltage will be rounded off to the nearest value among those 4 values available via hw: 5.2V / 5.5V / 5.8V / 6.1V.
Cable length	max 50m

* Channel Z = I (Index mark)

Figure 7.2.5: Connection SinCos encoder + 2 Freeze (SESC)

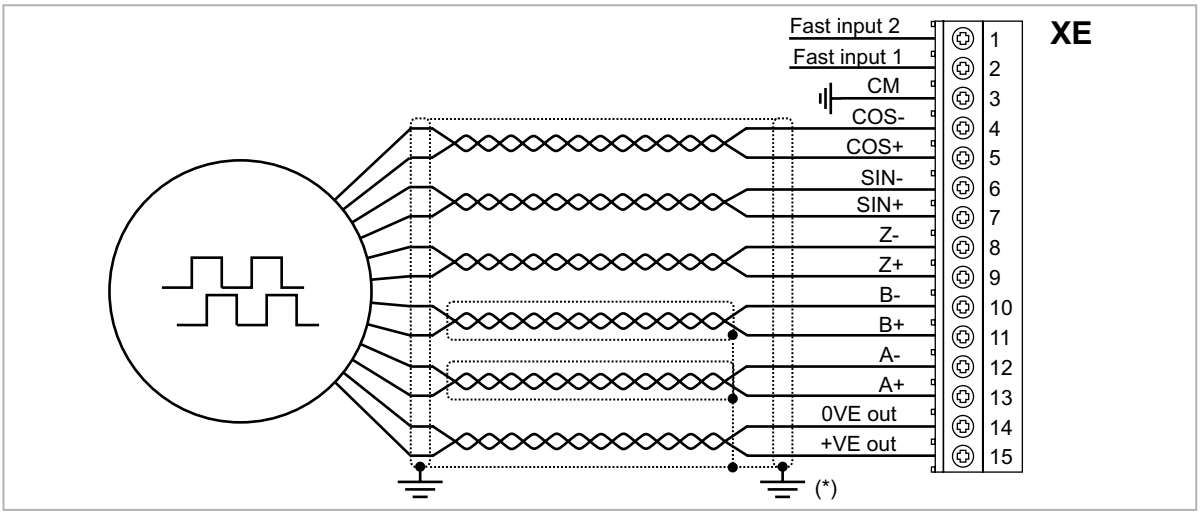

(*) Connection of shielding, see figure 7.2.4

(2) Connection sinusoidal encoder 3 Channels + 2 Freeze (SE)

Technical specification:

Channels	A+ A-, B+ B-, Z+ Z-, differential Management of loss of encoder signals.
Max frequency	200 kHz (check the number of encoder impulses according to the maximum speed)
Number of impulses	min 128, max 16384 (default 1024)
Electrical interface	Channels A/B 0.6 V ≤ Vpp ≥ 1.2 V (typ. 1.0 V) – Channel Z* 0.2 V ≤ Vpp ≥ 0.8 V
Load capacity	Channels A/B/Z* 8 mA @ 1.0 Vpp (Zin 120Ω)
Programmable internal power supply	min +5.2 V, max +6.1 V (default + 5.2 V) – Imax 150 mA. The internal power supply of the encoder can be selected from the keypad (ENCODER CONFIG menu, parameter Encoder supply (PAR 2102) to balance the loss of voltage due to the length of the encoder cable and load current. PAR 2102 Encoder supply range: min=5.2V, max= 6.1V, step of 0.1V; default=5.2V. The encoder supply voltage will be rounded off to the nearest value among those 4 values available via hw: 5.2V / 5.5V / 5.8V / 6.1V.
Cable length	max 50m

* Channel Z = I (Index mark)

Figure 7.2.6: Connection sinusoidal encoder 3 Channels + 2 Freeze (SE)

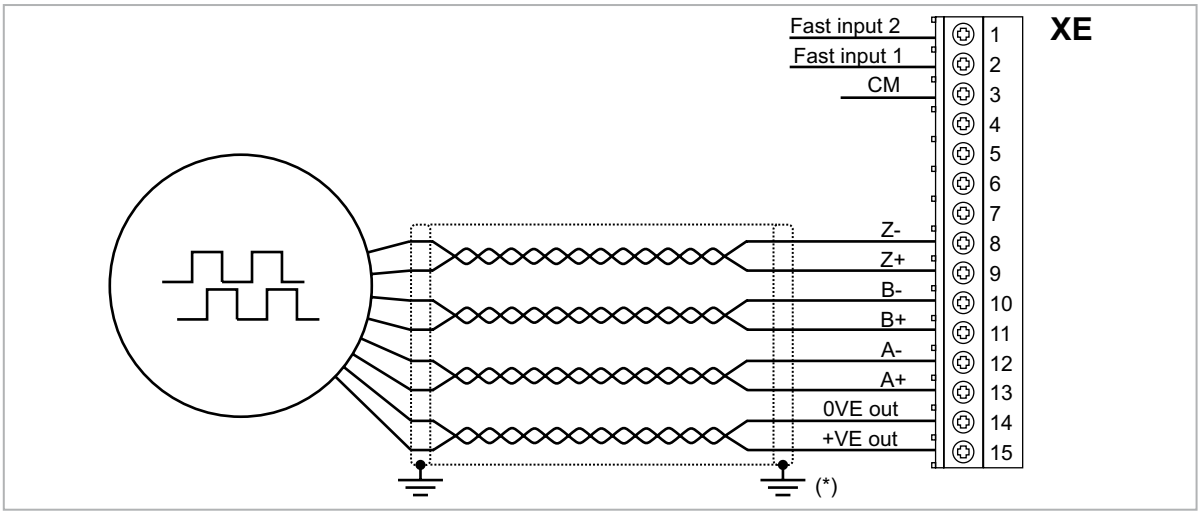

(*) Connection of shielding, see figure 7.2.4

(3) Connection EnDat Encoder + 2 Freeze (EnDat-SSi)

Technical specification:

Channels	A+ A-, B+ B-, differential Management of loss of encoder signals.
Max frequency	200 kHz (check the number of encoder impulses according to the maximum speed)
Number of impulses	min 128, max 16384 (automatic recognition at initialisation)
Electrical interface	0.6 V ≤ Vpp ≥ 1.2 V (typ. 1.0 V)
Load capacity	8 mA @ 1.0 Vpp (Zin 120Ω)
Programmable internal power supply	min +5.2 V, max +6.1 V (default + 5.2 V) − Imax 150 mA. The internal power supply of the encoder can be selected from the keypad (ENCODER CONFIG menu, parameter Encoder supply (PAR 2102) to balance the loss of voltage due to the length of the encoder cable and load current. PAR 2102 Encoder supply range: min=5.2V, max= 6.1V, step of 0.1V; default=5,2V. The encoder supply voltage will be rounded off to the nearest value among those 4 values available via hw: 5.2V / 5.5V / 5.8V / 6.1V.
Cable length	max 50m (see encoder cable length section)
Absolute channels	CK+ CK-, DT+ DT- differential, RS-485 Management of loss of encoder signals.
Interface	EnDat: 2.1/2.2 single/multi-turn (command set managed only compatible with 2.1) SSI: Standard Sick/Stegman single/multi-turn
Max frequency	EnDat: 1 MHz with delay compensation (not programmable) SSI: 400 KHz (not programmable)
Number of bits	EnDat: max 32 bit/turn* max 32bit/turn (automatic recognition at initialisation) SSI:13-25 bits (default 25)

Figure 7.2.7: Connection EnDat Encoder + 2 Freeze (EnDat-SSi)

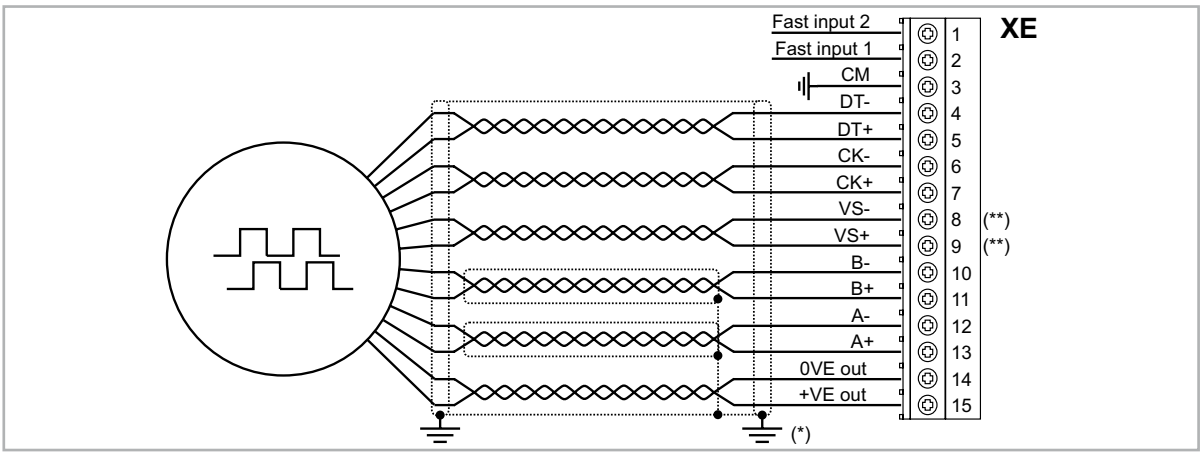

(*) Connection of shielding, see figure 7.2.4

(**) Caution - If not strictly observed, could result in damage to or destruction of encoder!

- **ADL300B-...-...-F-4-C - E24I models:** do no connect SENSOR-0V (VS- XE.8) and SENSOR-Up (VS+ XE.9).Based on standard cable do not use PIN 1 and PIN 4
- **All other models: VS+ / VS- :** optional (encoder power supply feedback)

Typical connection with M23 17 pin connector on motor side.

	Power supply					Incremental Signal				Absolute position values			
Pins	7	1	10	4	11	15	16	12	13	14	17	8	9
	Up	**Sensor** Up	0V	**Sensor** 0V	**Inside shield**	**A+**	**A -**	**B+**	**B-**	**DATA**	**$\overline{\text{DATA}}$**	**CLOCK**	**$\overline{\text{CLOCK}}$**
Cable Colour	Brown / Green	Blue	White / Green	White	-	Green / Black	Yellow / Black	Blue / Black	Red / Black	Gray	Pink	Violet	Yellow

* Optional.

(4) Connection EnDat Encoder Full Digital + 2 Freeze

Technical specification:

Programmable internal power supply	min +5.2 V, max +6.1 V (default + 5.2 V) – Imax 150 mA. The internal power supply of the encoder can be selected from the keypad (ENCODER CONFIG menu, parameter Encoder supply (PAR 2102) to balance the loss of voltage due to the length of the encoder cable and load current. PAR 2102 Encoder supply range: min=5.2V, max= 6.1V, step of 0.1V; default=5,2V. The encoder supply voltage will be rounded off to the nearest value among those 4 values available via hw: 5.2V / 5.5V / 5.8V / 6.1V.
Cable length	max 50m (see encoder cable length section)
Absolute channels	CK+ CK-, DT+ DT- differential, RS-485 Management of loss of encoder signals.
Interface	EnDat: 2.1/2.2 single/multi-turn (command set managed only compatible with 2.1)
Max frequency	EnDat: 1.5 MHz with delay compensation (not programmable)
Number of bits	EnDat: max 32 bit/turn* max 32bit/turn (automatic recognition at initialisation)

Figure 7.2.8: Connection EnDat Full Digital Encoder + + 2 Freeze

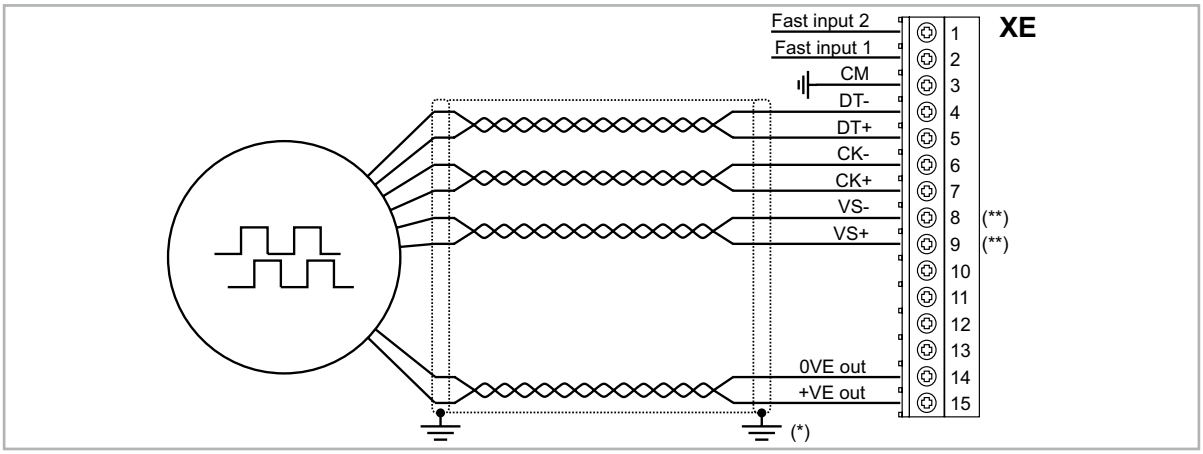

(*) Connection of shielding, see figure 7.2.4

(**) Caution - If not strictly observed, could result in damage to or destruction of encoder!

- **ADL300B-...-...-F-4-C - E24I models:** do no connect SENSOR-0V (VS- XE.8) and SENSOR-Up (VS+ XE.9).Based on standard cable do not use PIN 1 and PIN 4
- **All other models: VS+ / VS- :** optional (encoder power supply feedback)

Typical connection with M23 17 pin connector on motor side.

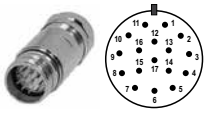

	Power supply					Incremental Signal				Absolute position values			
Pins	7	1 *	10	4 *	11	15	16	12	13	14	17	8	9
	Up	**Sensor** Up	0V	**Sensor** 0V	**Inside shield**	-	-	-	-	**DATA**	$\overline{\text{DATA}}$	**CLOCK**	$\overline{\text{CLOCK}}$
Cable Colour	Brown / Green	Blue	White / Green	White	-	-	-	-	-	Gray	Pink	Violet	Yellow

(5) Connection digital encoder 3 Channels + 2 Freeze (TTL Line Driver / push pull) (DE)

Technical specification:

Channels	A+ A-, B+ B-, Z+ Z-, differential line drivers. Management of loss of encoder signals (via software).
Max frequency	100 kHz (check the number of encoder impulses according to the maximum speed)
Number of impulses	min 128, max 16384 (default 1024)
Electrical interface	TTL (ref. GND) Ulow ≤ 0.5 V Uhigh ≥ 2.5 V
Load capacity	13 mA @ 5.5 V (Zin 300Ω)
Programmable internal power supply	min +5.2 V, max +6.1 V (default + 5.2 V) − Imax 150 mA. The internal power supply of the encoder can be selected from the keypad (ENCODER CONFIG menu, parameter Encoder supply (PAR 2102) to balance the loss of voltage due to the length of the encoder cable and load current. PAR 2102 Encoder supply range: min=5.2V, max= 6.1V, step of 0.1V; default=5,2V. The encoder supply voltage will be rounded off to the nearest value among those 4 values available via hw: 5.2V / 5.5V / 5.8V / 6.1V.
Cable length	max 50m

Figure 7.2.9: Connection digital encoder 3 Channels + 2 Freeze (TTL Line Driver / push pull) (DE)

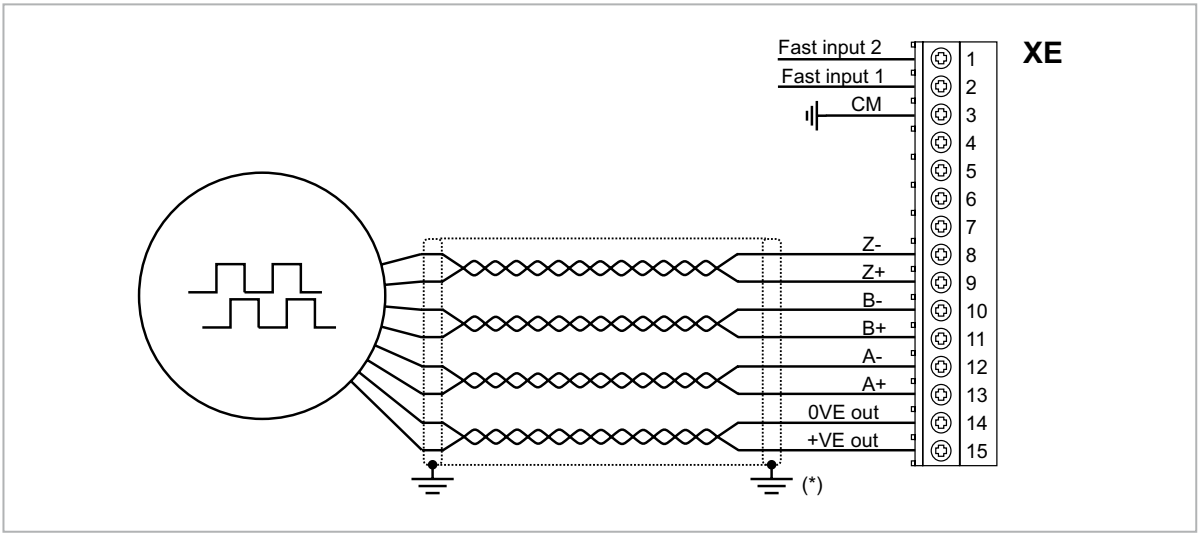

(*) Connection of shielding, see figure 7.2.4

(6) Connection Single Ended Digital Encoder

The following resistive divider must be added on single-ended configurations.

Figure 7.2.10: resistive divider for single-ended configurations

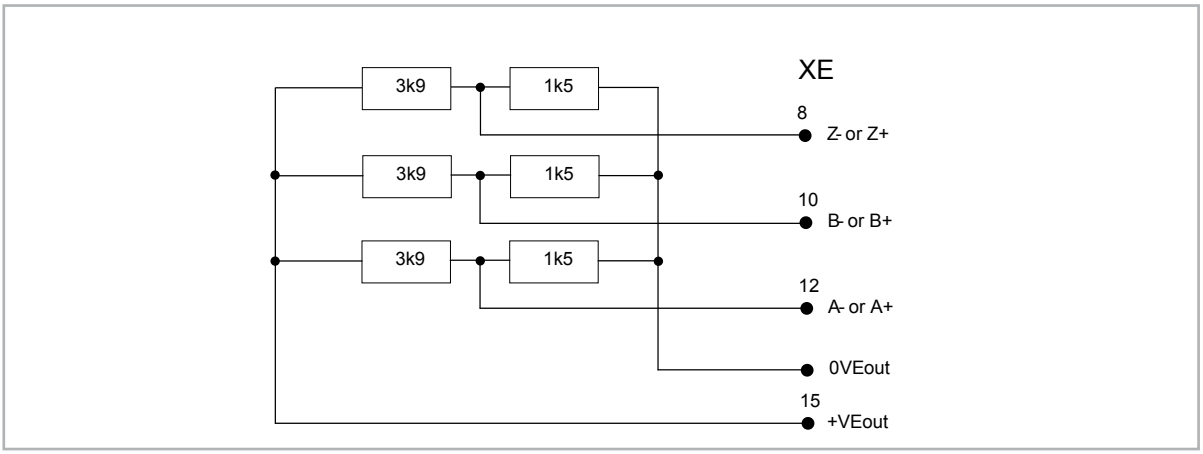

(7) Connection Sinusoidal SinCos Encoder + repetition (ADL300B-...-AD1) (SESC)

Technical specification (XE):

Channels	A+ A-, B+ B-, Z+ Z-, Sin+ Sin-, Cos+ Cos-, differential Management of loss of encoder signals.
Max frequency	200 kHz (check the number of encoder impulses according to the maximum speed)
Number of impulses	min 128, max 16384 (default 1024)
Electrical interface	Channels A/B/Sin/Cos 0.6 V ≤ Vpp ≥ 1.2 V (typ. 1.0 V) — Channel Z* 0.2 V ≤ Vpp ≥ 0.8 V
Load capacity	Channels A/B/Z* 8 mA @ 1.0 Vpp (Zin 120Ω) Channels Sin/Cos 1 mA @ 1.0 Vpp (Zin 1kΩ)
Programmable internal power supply	min +5.2 V, max +6.1 V (default + 5.2 V) — Imax 150 mA. The internal power supply of the encoder can be selected from the keypad (ENCODER CONFIG menu, parameter Encoder supply (PAR 2102) to balance the loss of voltage due to the length of the encoder cable and load current. PAR 2102 Encoder supply range: min=5.2V, max= 6.1V, step of 0.1V; default=5,2V. The encoder supply voltage will be rounded off to the nearest value among those 4 values available via hw: 5.2V / 5.5V / 5.8V / 6.1V.
Cable length	max 50m

* Channel Z = I (Index mark)

Technical specification (XER):

Channels	A+ A-, B+ B-, differential line drivers, optoisolated.
Max frequency	200 kHz
Number of impulses	1/1-1/2-1/4-1/8 repeat (default 1/1)
Electrical interface	TTL (ref. GND) Ulow ≤ 0.5V Uhigh ≥ 2.5V Typ 3.5V
Load capacity	TTL 20mA @ 5,5V (Zin 120Ω) for each channel
Cable length	max 50m

Figure 7.2.11: Connection Sinusoidal SinCos Encoder + repetition (ADL300B-...-AD1) (SESC)

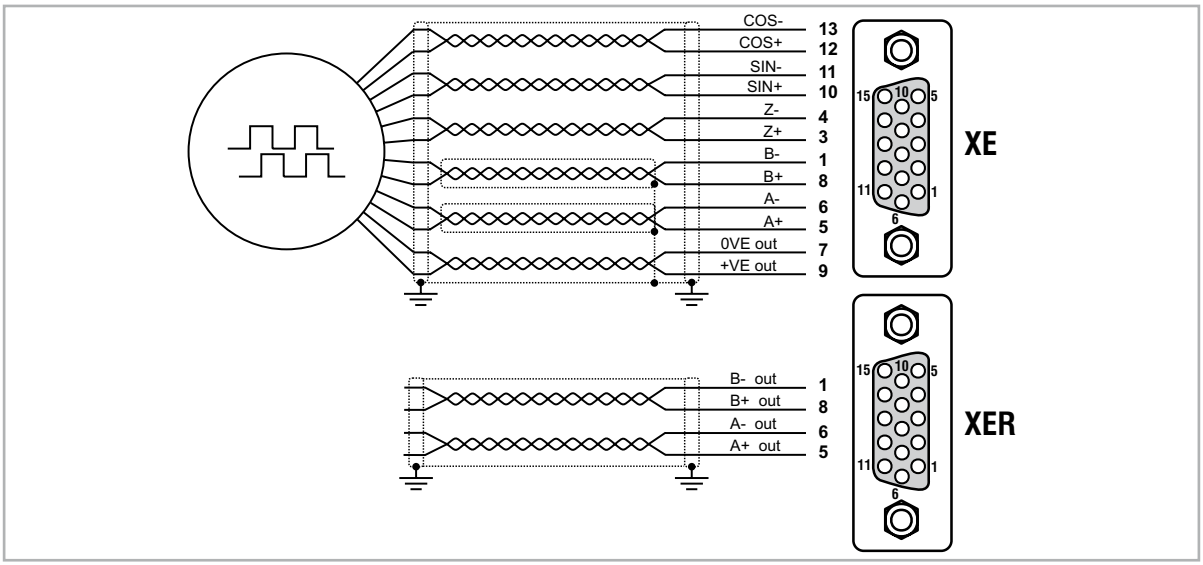

Note! See the figures above for wiring the sinusoidal and digital encoder. Remember that the cup connector has a different pinout numbering.

(8) Repeat Encoder (TTL line-driver)

ADL300B-...-E24R have an incremental encoder output with TTL Line Driver levels (according to the main encoder supply) to be used to repeat the servomotor feedback device. This function is performed via HW and an encoder output can be repeated with a programmable divider. The encoder output signals are available on the XER connector:

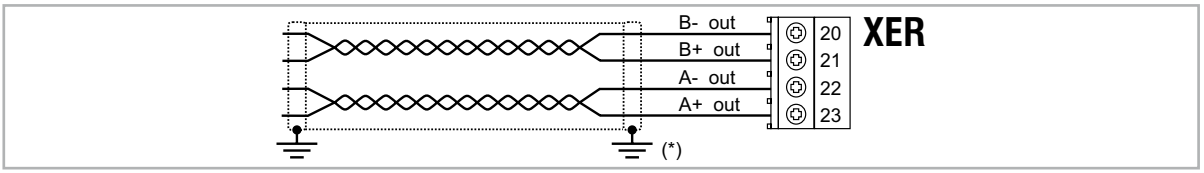

(*) Connection of shielding, see figure 7.2.4

Technical specification:

Channels	A+ A-, B+ B-, differential line drivers, optoisolated.
Max frequency	200 kHz
Number of impulses	1/1-1/2-1/4-1/8 repeat (default 1/1)
Electrical interface	TTL (ref. GND) Ulow ≤ 0.5V Uhigh ≥ 2.5V Typ 3.5V
Load capacity	TTL 20mA @ 5,5V (Zin 120Ω) for each channel
Cable length	max 50m

7.2.4 Integrated Safety Card Connection

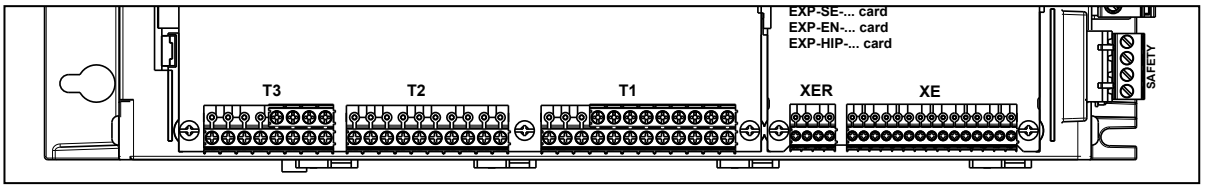

The SAFETY EN+, SAFETY EN+, SAFETY OK1 and SAFETY OK2 terminals must be connected as shown in the typical connection diagrams in chapter 7.3.2.

Safety card management is now integrated in the firmware.
The Safety card must be enabled to enable the drive (menu 9 - COMMANDS, PAR 1010 **Commands safe start**, Default = 1).
The drive is disabled if the Safety card enable command is removed while it is enabled.
To re-enable the drive, re-enable the Safety card then remove and re-send both the Enable and Start commands.

7.3 Connection diagrams

Note! This chapter describes the typical wiring diagrams with reference to ADL300 drives with standard configuration.

7.3.1 Regulation potentials, digital I/O

Figure 7.3.1.1: Regulation potentials (ADL300A)

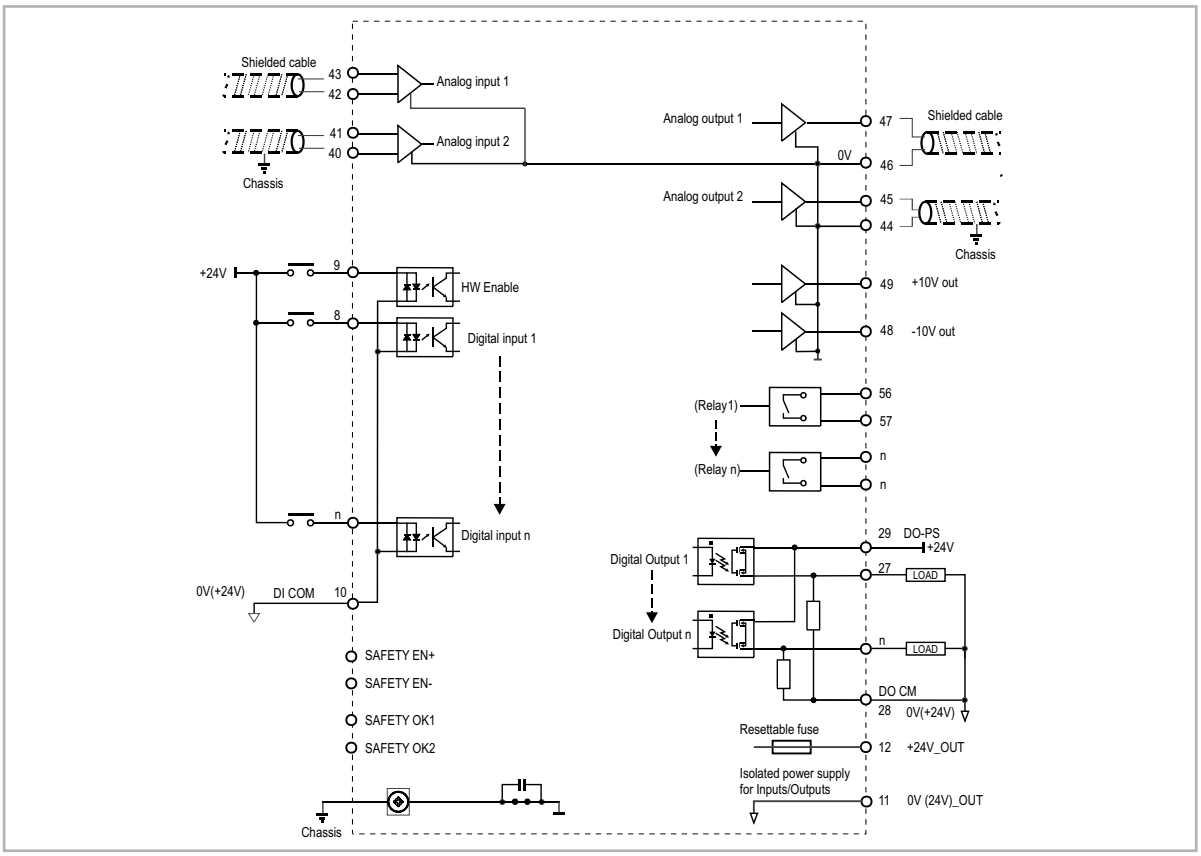

Figure 7.3.1.2: Regulation potentials (ADL300B)

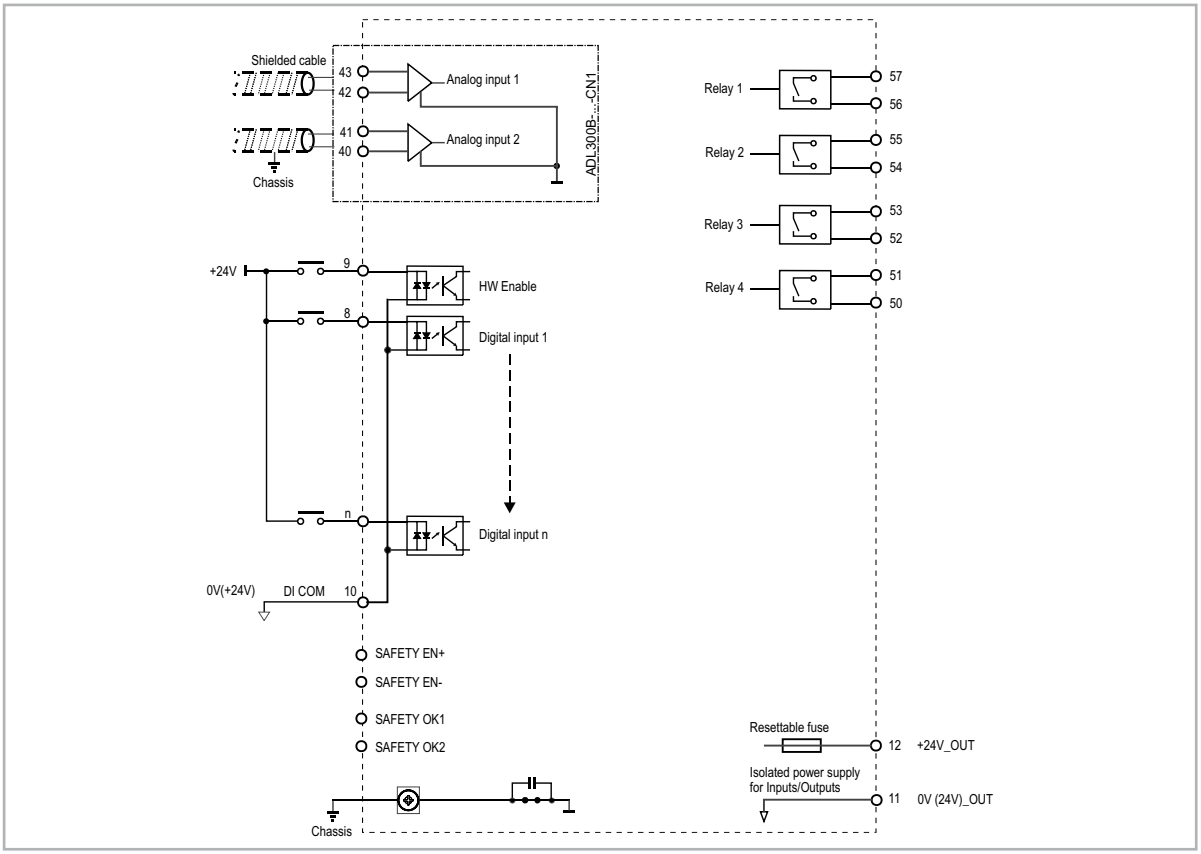

7.3.2 Typical connection diagram

Figure 7.3.2.1: Typical connection diagram (ADL300A-1040 ...3220 sizes)

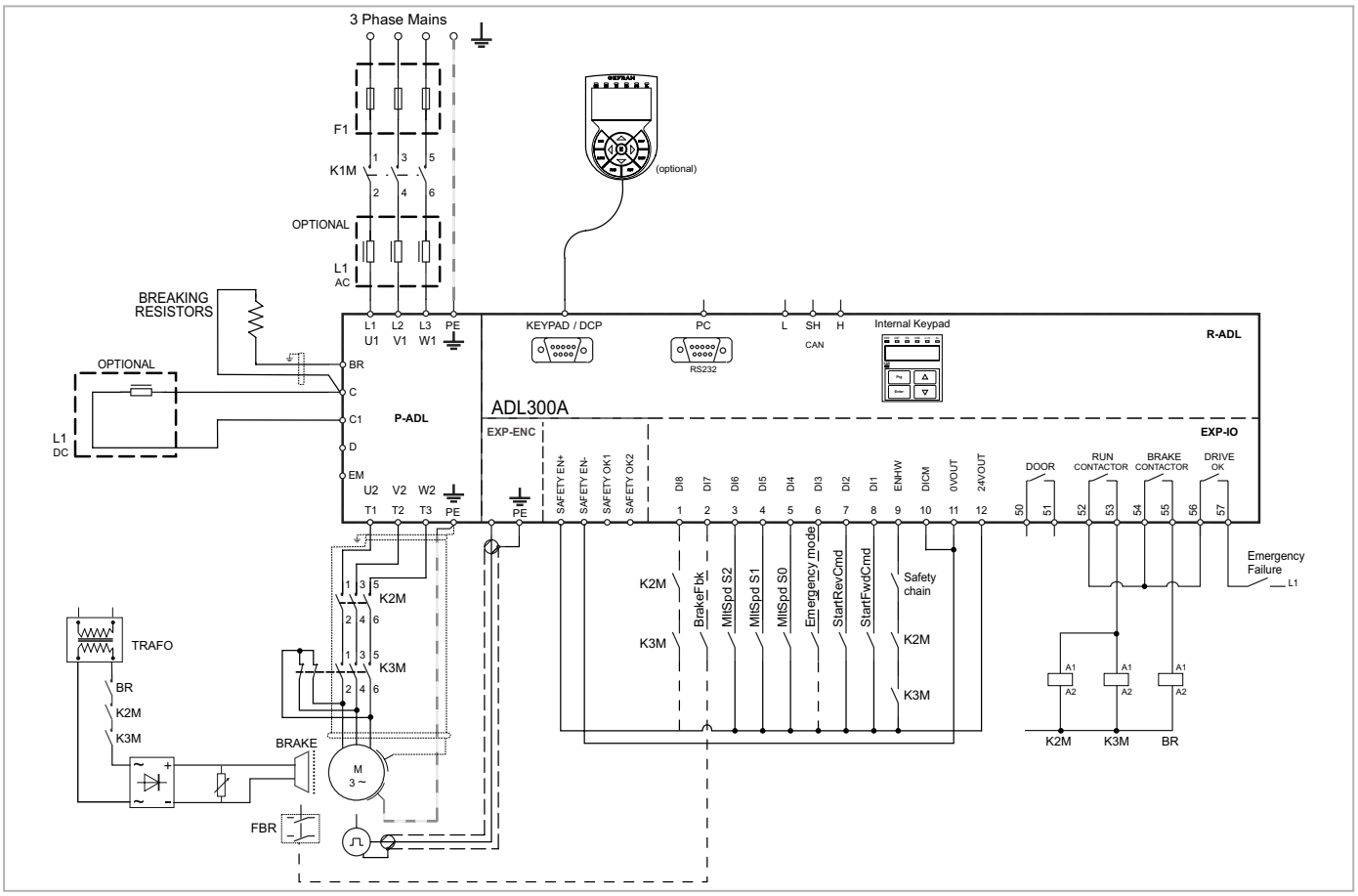

Figure 7.3.2.2: Typical connection diagram (ADL300A-4300 ...4450 sizes)

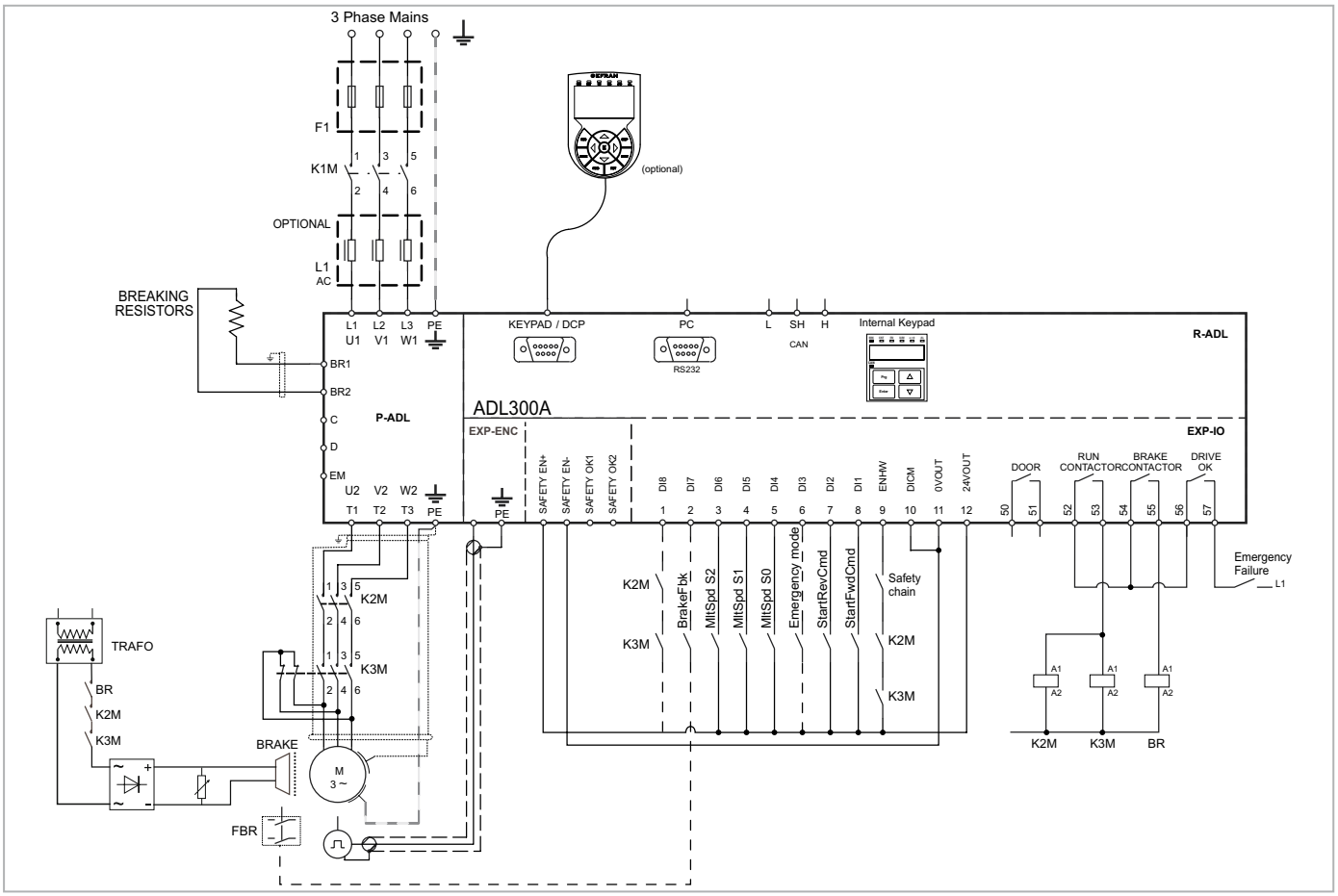

Figure 7.3.2.3: Typical connection diagram ADL300.-2M

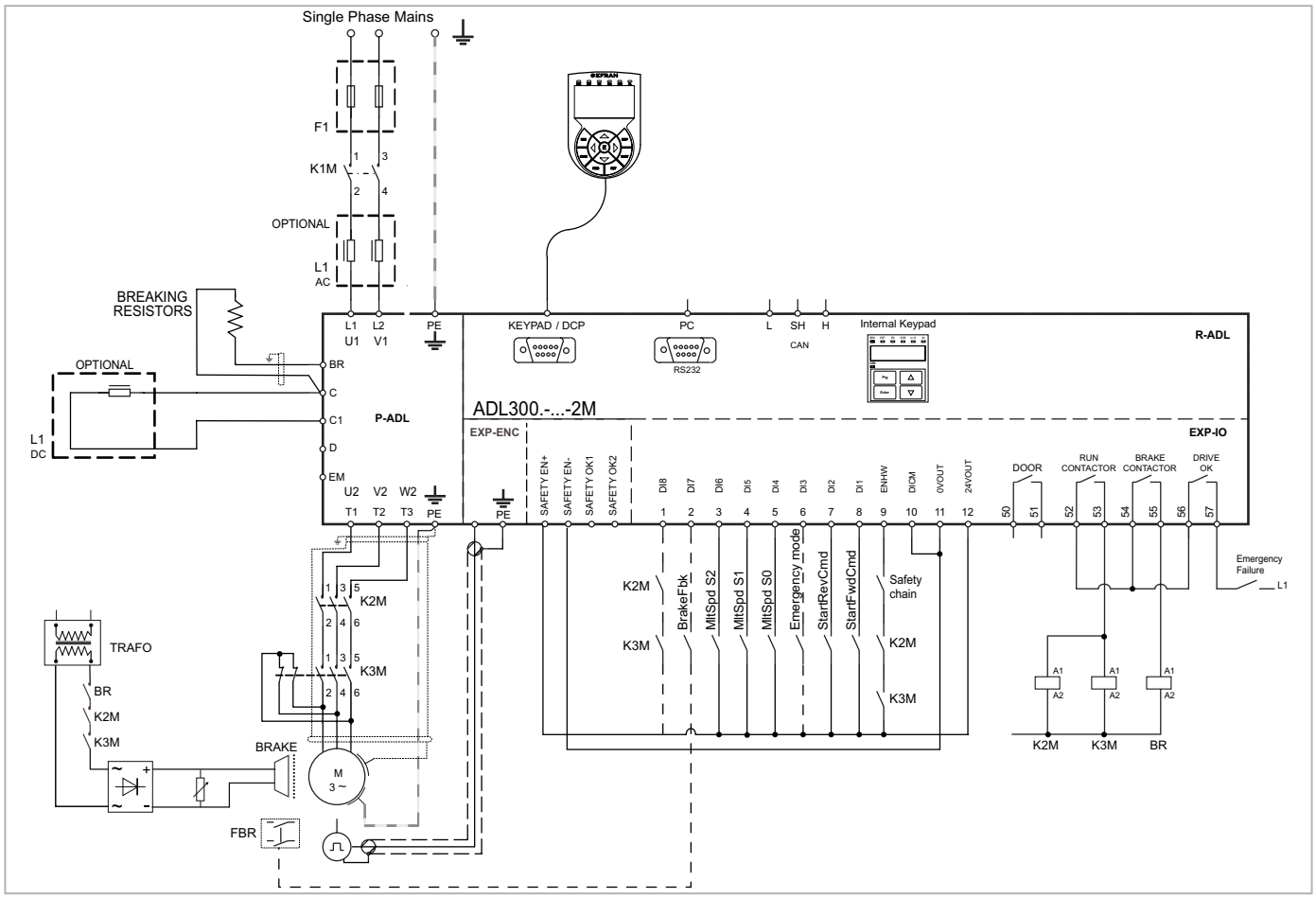

7.3.3 Emergency connection diagram (with UPS or EMS module)

The configuration described in this paragraph can be used to manage the motor in an emergency power failure condition (with 230 VAC single-phase UPS power supply or EMS module).

Figure 7.3.2.4: Emergency connection diagram (ADL300A-4300 ...4450 sizes)

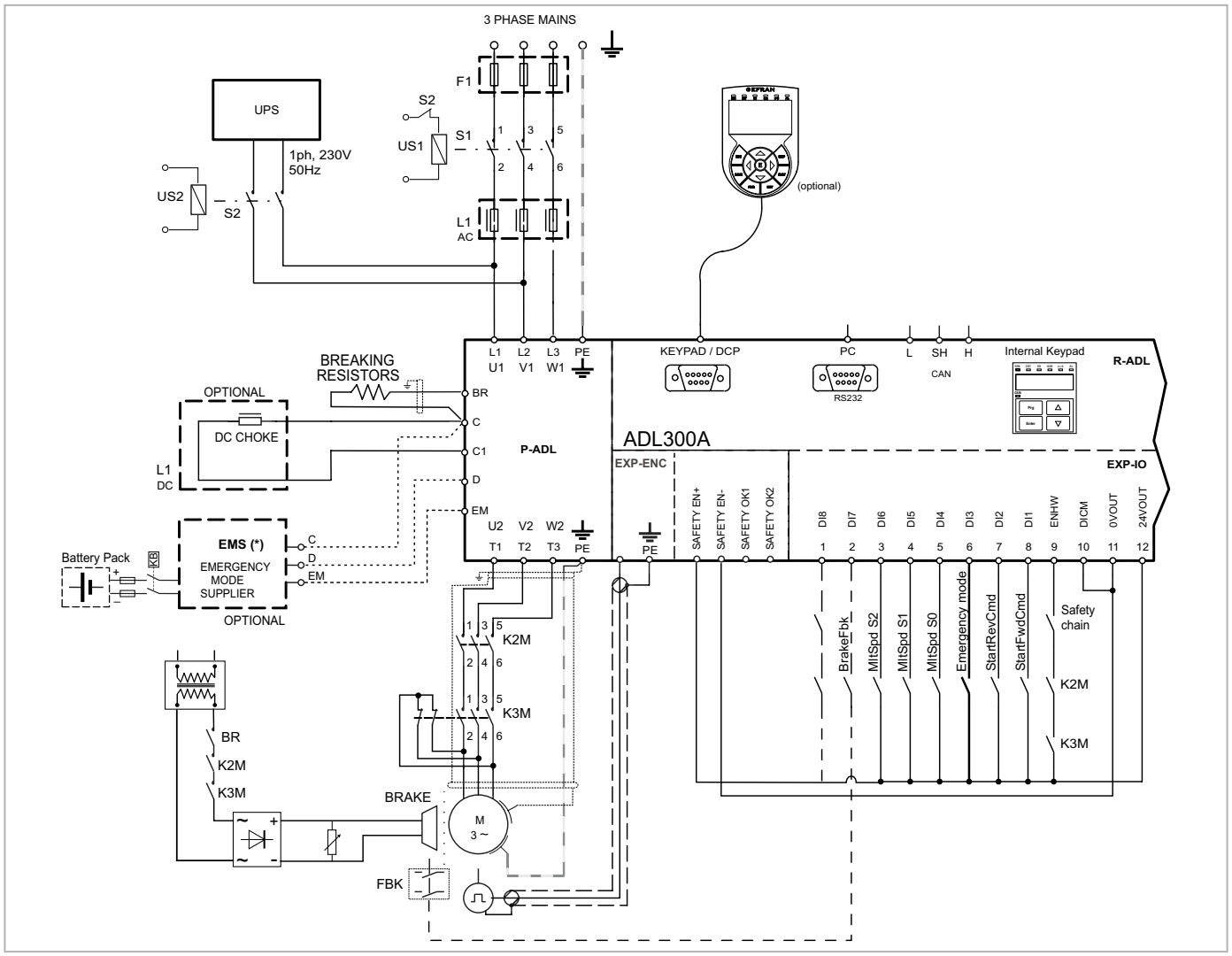

(*) EMS module instead of UPS device.

If an emergency power supply with UPS is used, the voltage on the DC_Link must not be below the minimum limit of 230V. If this occurs, connect the EM terminal to an additional power supply (see above: emergency connection in EMS mode).

Figure 7.3.2.5: Emergency connection diagram (ADL300A-1040 ...3220 sizes)

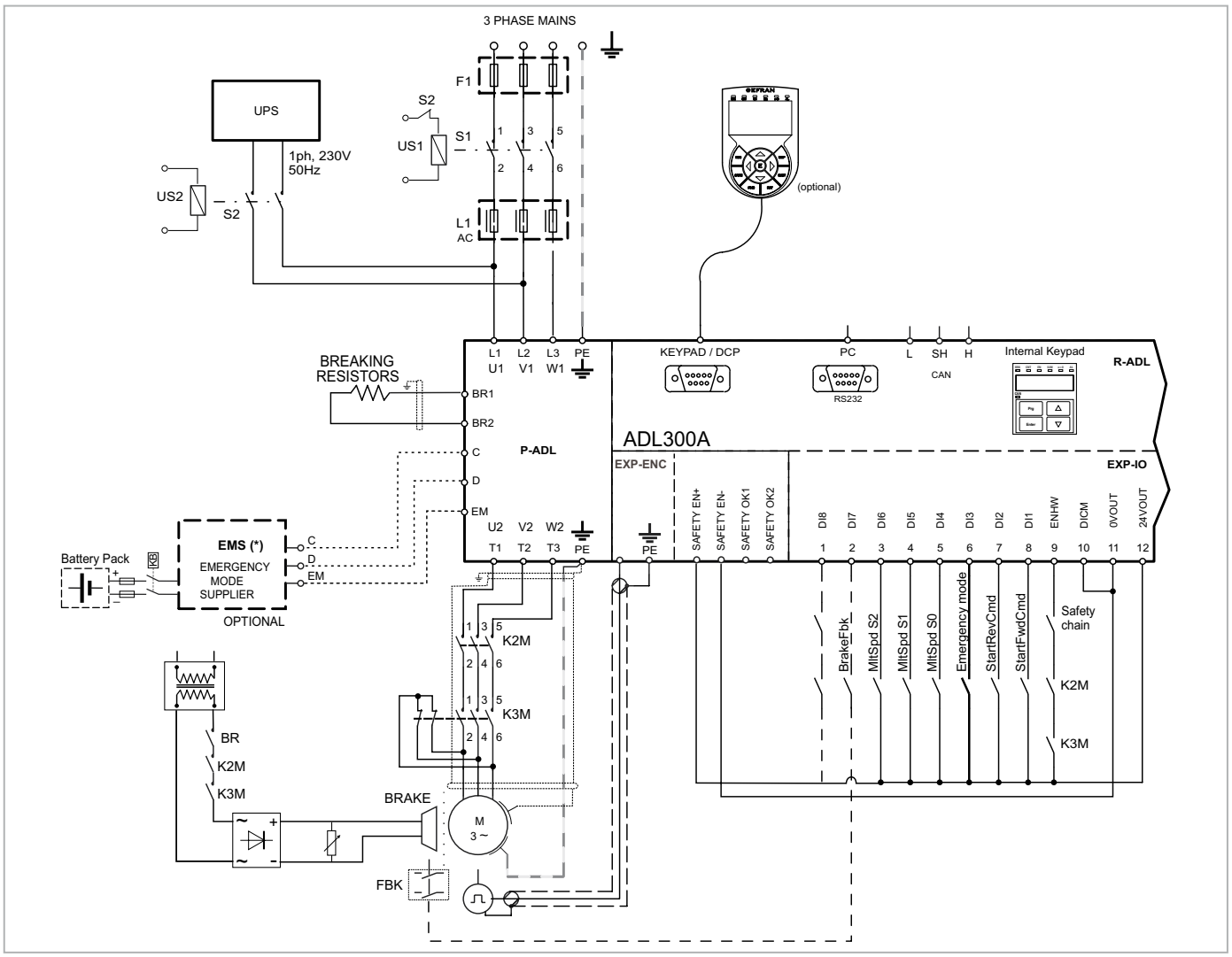

(*) EMS module instead of UPS device.

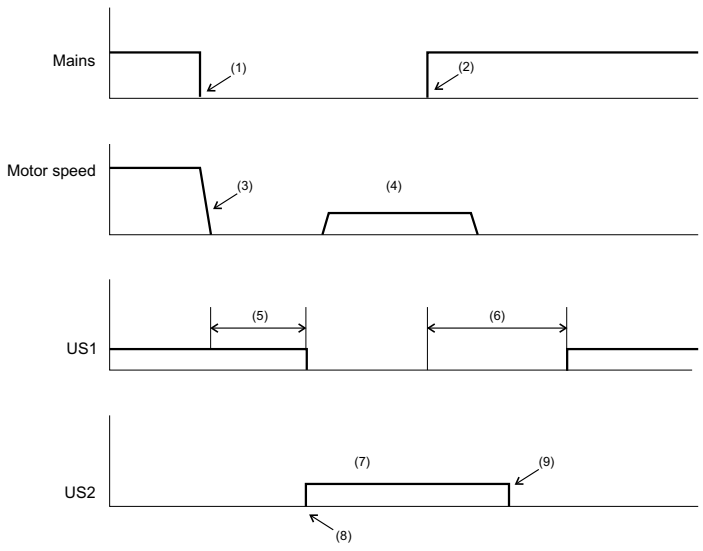

(1) Power supply failure, the drive signals **Undervoltage**

(2) The power supply can be restored at any time while running, but the drive is separated from the network by S1.

(3) The motor is braking

(4) The **Forward** or **Back** commands are sent. A very low speed must be set (Menu 5.6.1, PAR 12060). The cabin must be brought to the floor. The **Undervoltage** alarm is ignored.

(5) The drive must be turned off. This time depends on the size of the drive. Contactor S1 must be OFF.

(6) The drive must be turned off. S1 must be OFF.

(7) Set S2=ON, power is supplied by UPS. While S2 is ON the contact logic must guarantee that S1=OFF
(8) S2 can be set to ON, after a delay, manually or automatically using power failure control devices.
(9) S2 must be OFF at the end of the sequence

Figure 7.3.2.6: Emergency connection diagram (ADL300-...-2M-1011 ...3055 sizes)

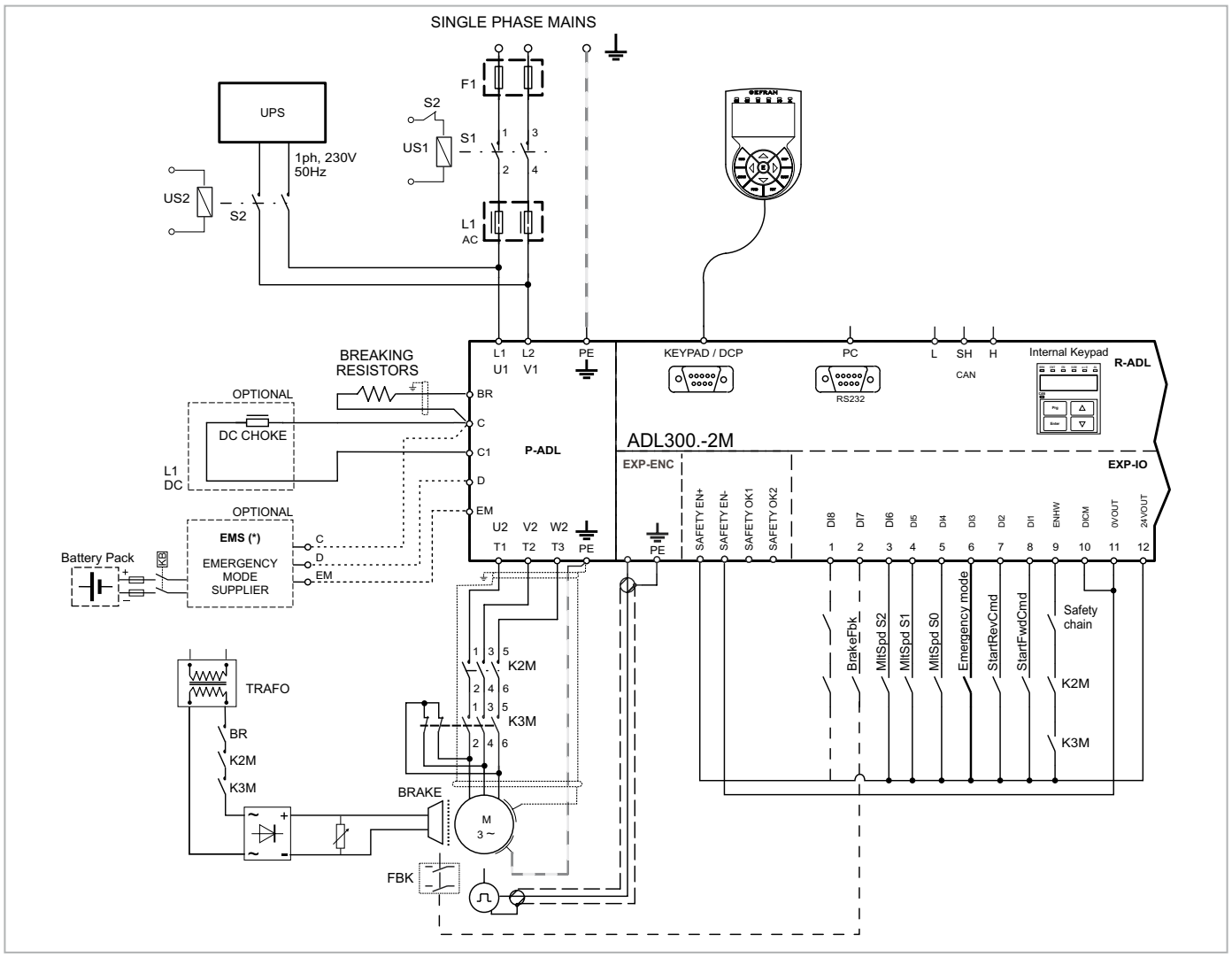

(*) EMS module instead of UPS device.

Figure 7.3.2.7: Safety connections for control using a single contactor

Diagram of a lift system complying with EN81-1 12.7.3 b), with just one contactor and integrated safety function.

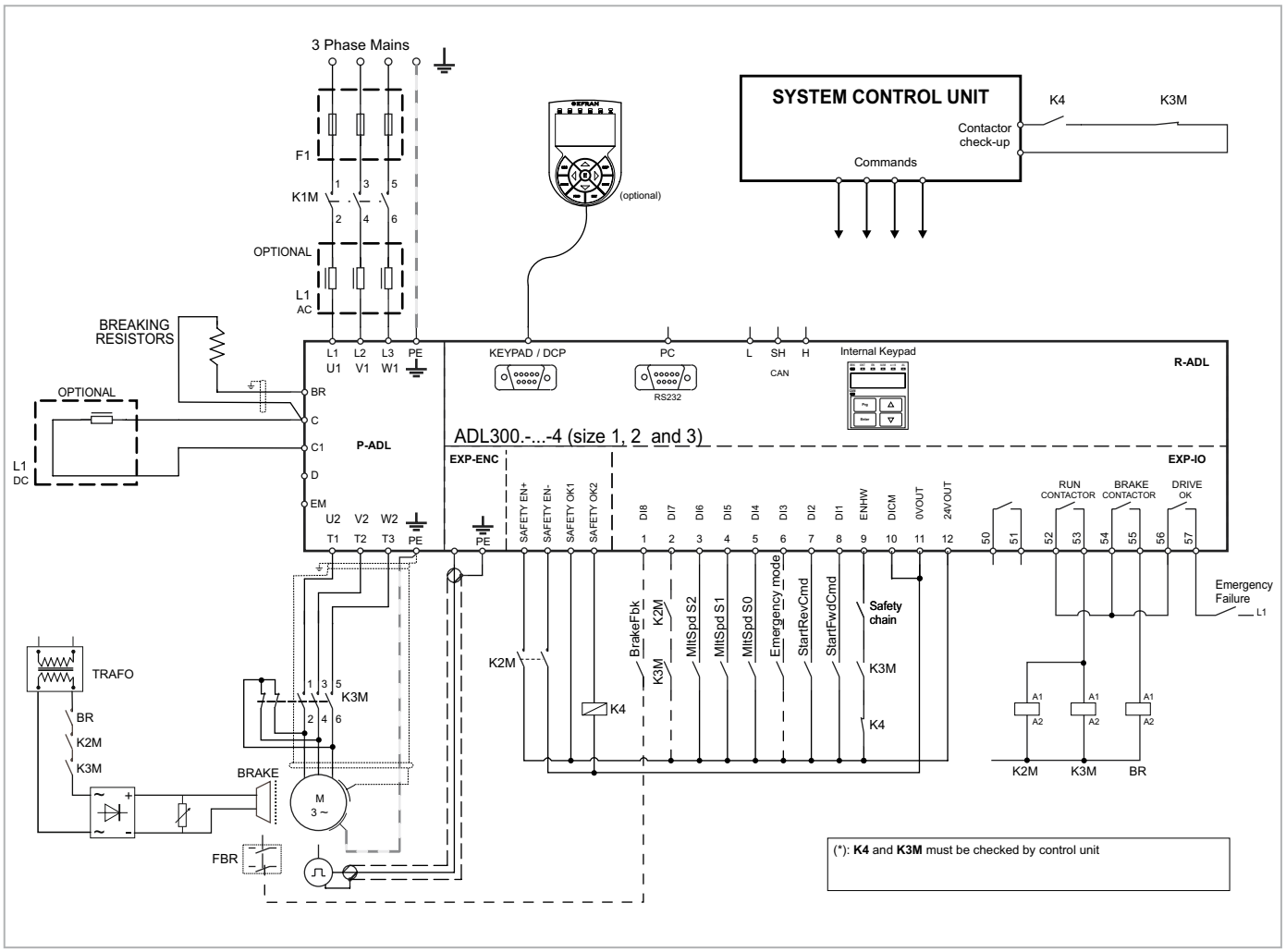

Warning!

To use this type of connection reference should be made to the safety and installation instructions in the "SAFETY MANUAL" (file: x08051ko-Safety User Manual-1_0r_IT and x08051ko-Safety User Manual-1_0r_EN on the CD-ROM supplied with the inverter or downloadable from the www.gefran.com website).

Diagram of a lift system complying with EN81-20 5.9.2.5.3 d, without contactors and STO integrated safety function (EN61800-5-2- SIL3).

Figure 7.3.2.8-A: Contactorless connections (Asynchronous motor)

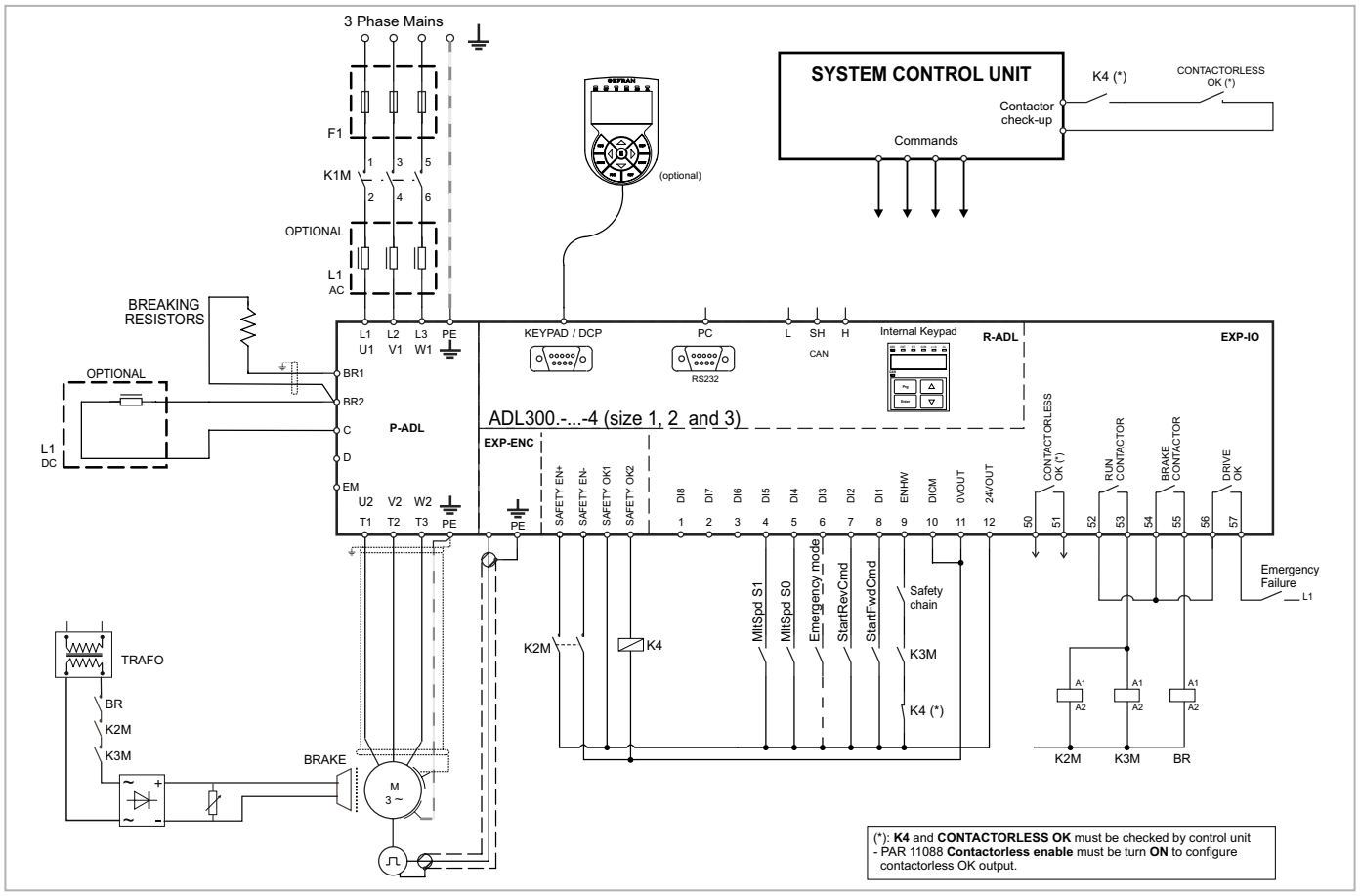

Figure 7.3.2.8-B: Contactorless connections (Synchronous motor)

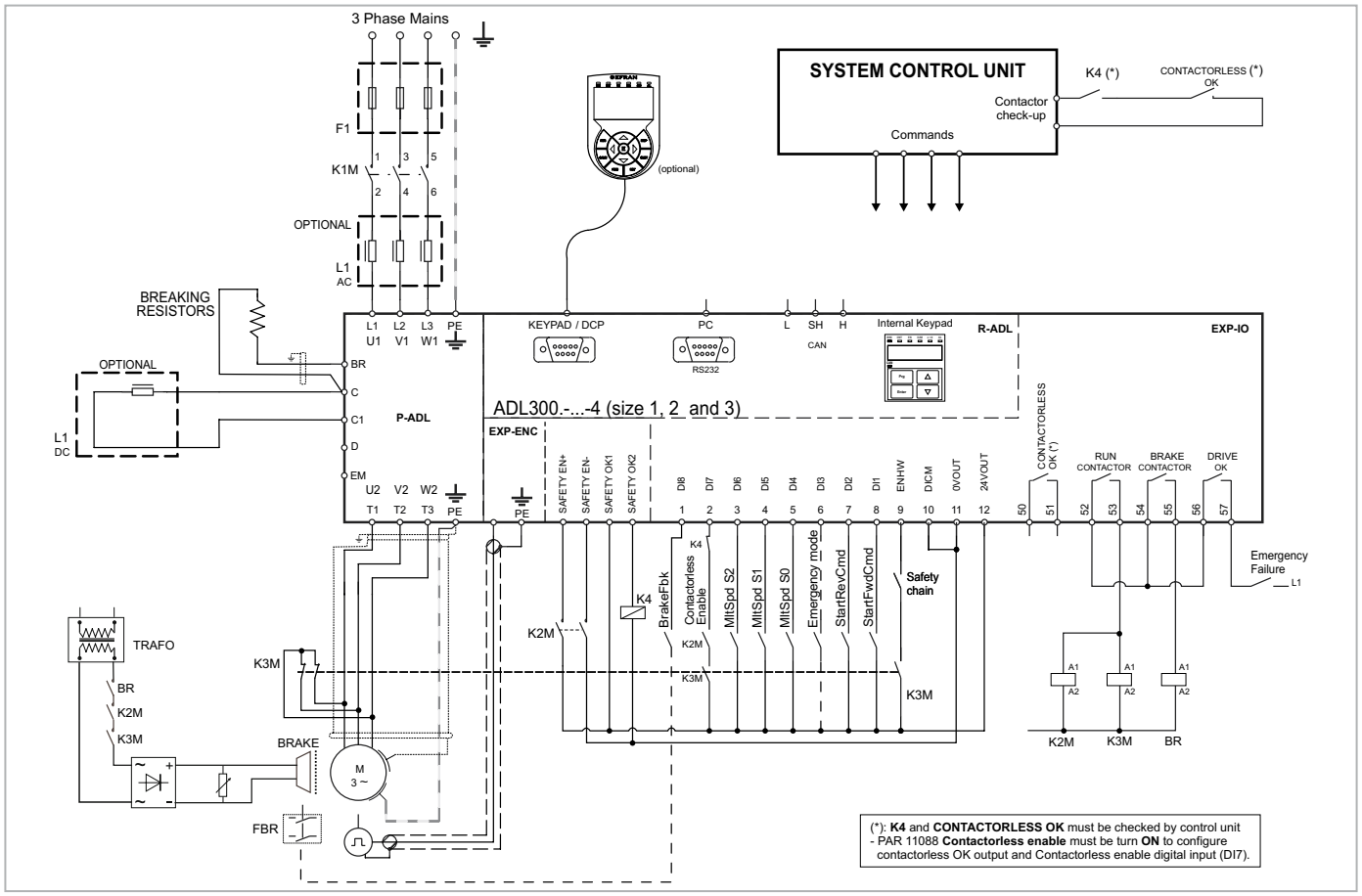

Warning!

To use this type of connection reference should be made to the safety and installation instructions in the "SAFETY MANUAL" (file: x08051ko-Safety User Manual-1_0r_IT and x08051ko-Safety User Manual-1_0r_EN on the CD-ROM supplied with the inverter or downloadable from the www.gefran.com website).

7.3.4 Connection diagram for emergency maneuver (for synchronous motor only).

Manovra di emergenza a “uomo presente”. La funzione ha lo scopo di permettere il movimento della cabina quando si Emergency maneuver with operator present. This function allows the car to move when there is a power failure in order to bring it to the closest floor by gravity.

- This maneuver can be performed only when the drive is in emergency mode, which the control card indicates with the “Emergency Mode” digital input.
- Only for gearless applications (with synchronous motors).
- There must be a **Brake Open** digital input connected to a **Brake Open** button on the control panel that will enable car movement. The input is configurable.
- When the button is pushed the inverter opens the brake contactor via the **Brake Contactor Relay** output.
- The operator then pushes the button to move the car.
- With parameter 11822 **Em max speed** (Emergency manual max. speed) you can set maximum car (or motor) speed during this maneuver. The speed can be expressed in m/s (for the car) or in rpm (for the motor).
- If the car reaches the maximum allowed speed, the drive locks the brake for a time T configurable by parameter 11824 **Brake lock time**, disabling use of the button (which will not release the brake even if pushed).
- As soon as emergency manual maneuver is resumed, the display (both optional and built-in) automatically shows the current car speed (or motor speed if set in rpm) and direction (Fwd or rev).
- This maneuver must be disabled in case of inspection.

The car will move (Brake Contactor = Open) only in the following conditions:

- Emergency Mode: ON (Contactor Closed)
- Brake Open: ON (Contactor Closed)
- Emergency Manual Vmax: < Vmax
- Contactor Lock Time = 0
- Parameter 11820 **Brake Release Sel** = Null (default)

Figure 7.3.4.1: Diagram of main emergency maneuver

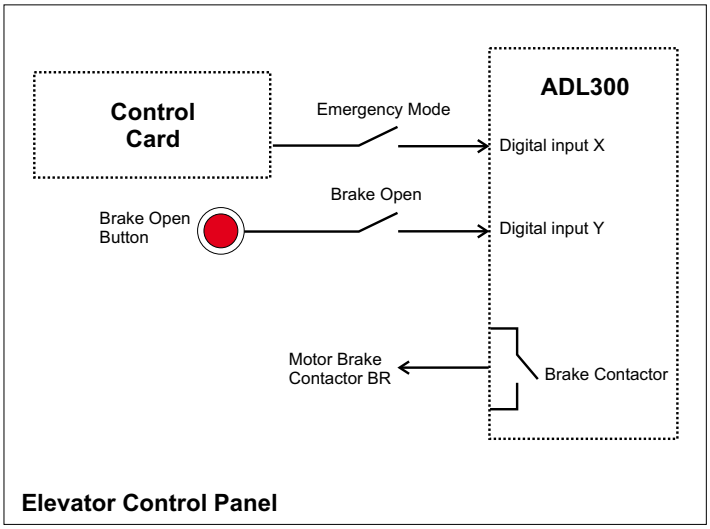

7.4 Serial interface (PC connector)

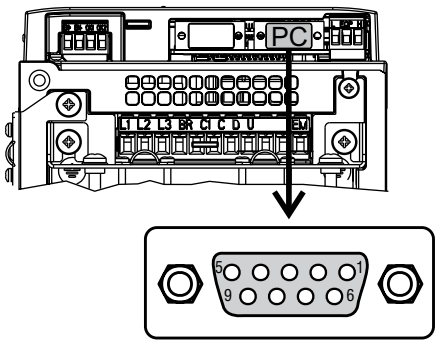

	Funzione / Function	I/O	Interfaccia elettr./ Elect. Interface
PIN 1	-	–	–
PIN 2	TxD	O	RS232
PIN 3	RxD	I	RS232
PIN 4	-	–	–
PIN 5	0V (Ground)	–	Alimentazione / Supply
PIN 6	-		–
PIN 7	-	–	–
PIN 8	-	–	–
PIN 9	+5V	–	Alimentazione / Supply

I = Ingresso / Input O = Uscita / Output

The ADL drive is provided with a port as standard (9-pin D-SUB receptacle connector) for connection of the RS232 serial line used for drive-PC point-to-point communication (with the GF-eXpress configuration software).

Note!

The port **is not galvanically isolated**. The **PC-OPT-ADL option must be used If galvanic separation is required.**

7.4.1 Drive/RS232 port point-to-point connection

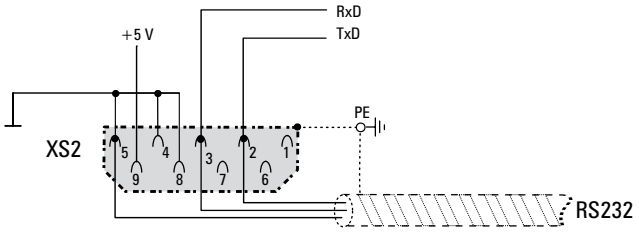

Figure 7.5.1: Serial connection (not isolated)

The serial connection must consist of a twin pair with two symmetrical conductors, spiral wound with a common shield, plus the ground connection cable, connected as shown in the figure (a 3-wire RS232 cable, not cross-over, is recommended). The maximum transmission speed is 38.4 kBaud.
For connection of the RS232 serial line to the PC, see the figure below.

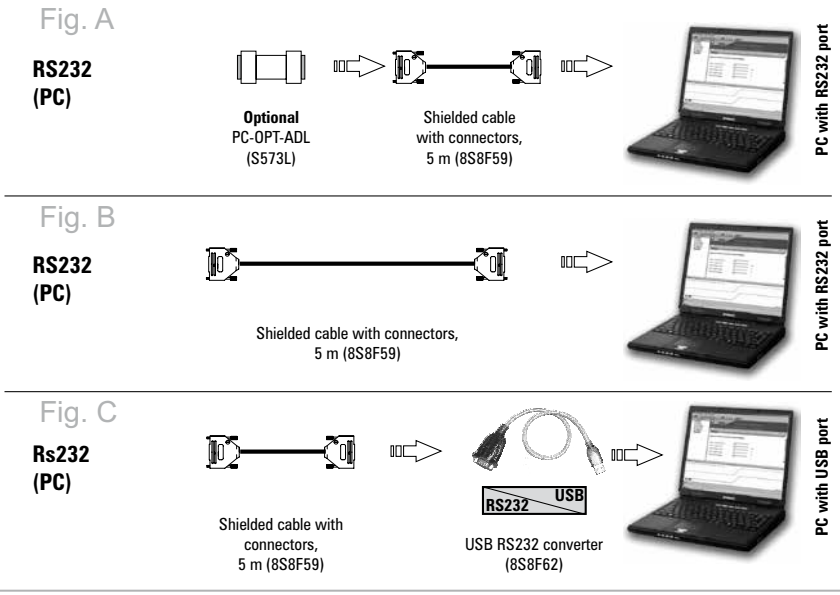

Figure 7.5.2: RS232 connection to the PC

Connection to a PC with RS232 port and PC-OPT-ADL option (isolated)

The following are required for connection:

- optional PC-OPT-ADL card (for galvanic isolation), code S573L
- a shielded cable (code 8S8F59) for connection to the RS232 PC port of the drive to the RS232 connector of the PC, see figure 7.4.1-A.

Connection to a PC with RS232 port (not isolated)

The following are required for connection:

- a shielded cable (code 8S8F59) for connection to the RS232 PC port of the drive to the RS232 connector of the PC, see figure 7.4.1-B.

Connection to a PC with USB port (not isolated)

The following are required for connection:

- an optional **USB/RS232** adapter, code 8S8F62 (including the cable for USB connection)
- a shielded cable (code 8S8F59) for connection to the RS232 PC port of the drive to the USB/RS232 adapter, see figure 7.4.1-C.

7.5 CAN interface

CANopen is a communication profile for CAL-based industrial systems (refer to the CANopen CAL-Base COMMUNICATION PROFILE for Industrial Systems; CiA Draft Standard 301 Version 4.2 Date 13 February 2002 by CAN in Automation e. V.).
The ADL300 can be requested with the interface for connection to CAN networks at the time of ordering (ADL300-...-C models). The drive also implements the DS417 profile according to CANopen 2.0.0 specifications.
The CAN protocol (ISO 11898) used is CAN2.0A with 11-bit identifier. The integrated CANopen interface has been developed as a Minimum Capability Device. Data are exchanged cyclically; the master reads the data made available by the slaves and writes the reference data to the slaves.
The interface is provided with functional isolation (> 1 kV).
Connection is via the CAN (XC) connector and no power supply is required.

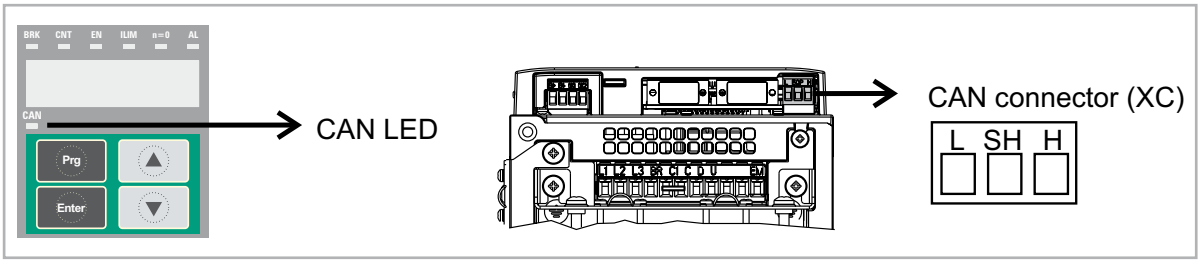

Terminal	Name	Function	Cable cross-section
L	CAN_L	CAN_L bus line (low dominant)	0.2 ... 2.5 mm² AWG 26 ... 12
SH	CAN_SHLD	CAN shielding	
H	CAN_H	CAN_H bus line (high dominant)	

LEDs	Meaning
CAN (green)	
Off	Stop
Flashing	Pre-operational
On	Operational

A shielded twin-pair (of the type described in the CANopen specifications) must be used for connection to the bus, and must be laid separately from the power cables, at a distance of at least 20 cm. Cable shielding must be grounded at the two ends. If the cable shielding is grounded at different points of the system, use equipotential connection cables to reduce the current flow between the drive and the CANbus master.

Note!

As regards terminations: the first and last termination on the network must have a 120 ohm resistor between pins L and H.

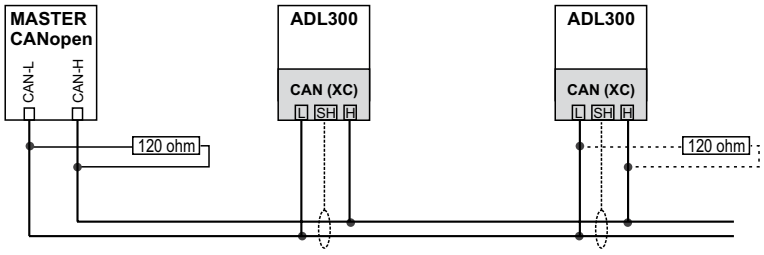

Figure 7.5.1: CANbus connection

7.6 Optional Keypad interface (keypad connector)

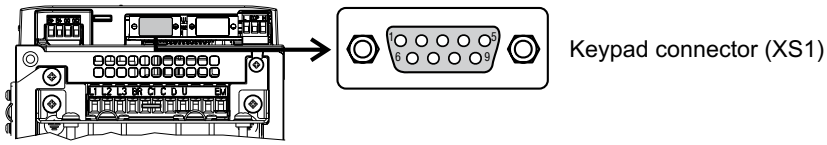

Several devices can be connected to the multifunction keypad connector (9-pin D-SUB receptacle connector XS1) and are automatically recognised and managed.

1) **Optional KB-ADL keypad** (default connection)

- The keypad is supplied with a 40 cm-long cable, for longer distances, a 1:1 non-crossover cable must be used (9 shielded cables, e.g. code 8S8F59, length 5 m).
- Very long cables (max. 15 m) must be of good quality with low voltage loss (max. 0.3 ohm/m).

2) **I/F DCP protocol**

- For the connection reference should be made to the DCP specifications (see next screen)

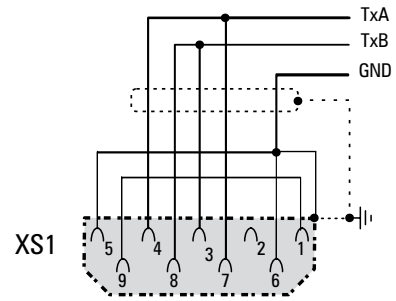

Figure 7.5.3: DCP connection (not isolated)

Caution

The connections (1) and (2) have no galvanic isolation!

7.7 Saving data on the Memory Card

With the ADL300 drive, data can be saved on a normal Secure Digital-type memory card. In order to use the memory card, the specific adapter (SDCARD-ADL) must be connected by inserting it into the dedicated slot on the front of the drive. For further information, see chapter 8.9.

7.8 Braking

There are various possible types of braking:

- Internal Braking Unit
- Injection of direct current from the Inverter into the motor (D.C. braking)

There are two essential differences between the two braking methods:

- A braking unit can be used for speed reduction (e.g.: from 1000 to 800 rpm), whereas D.C. braking can only be usedfor braking to standstill.
- The energy in the drive is converted into heat in both cases. This conversion takes place in a braking resistor encased in the braking unit. With D.C. braking, the energy is converted into heat in the motor itself, resulting in a further rise in motor temperature.

7.8.1 Braking unit (internal)

Frequency-regulated asynchronous motors during hyper-synchronous or regenerative functioning behave as generators, recovering energy that flows through the inverter bridge, in the intermediate circuit as continuous current.
This leads to an increase in the intermediate circuit voltage.
Braking units (BU) are therefore used in order to prevent the DC voltage rising to an impermissible value. When used, these activate a braking resistor that is connected in parallel to the capacitors of the intermediate circuit. The feedback energy is converted to heat via the braking resistor (R_{BR}), thus providing very short deceleration times and restricted four-quadrant operation.

In the standard configuration, ADL drives (≤ 55kW) comprise an internal braking unit.

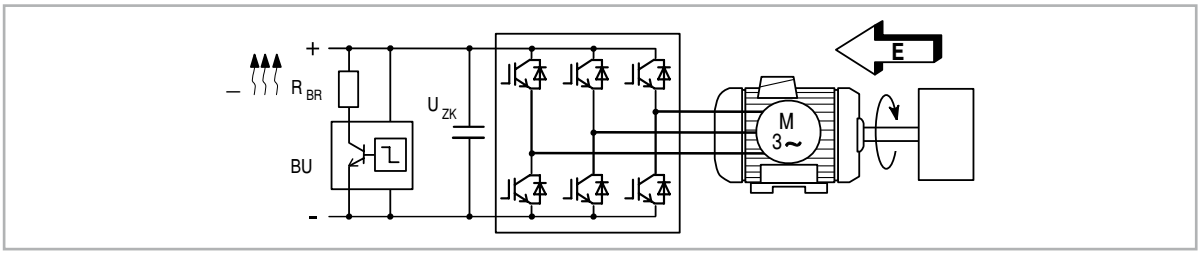

Figure 7.8.1: Operation with braking unit (circuit diagram)

Note! When the internal braking unit is present the protection must consist of fast-acting fuses! Follow the relative assembly instructions.

A twisted cable must be used for the connection of the braking resistor (terminals BR and C or BR1 and BR2). If the resistor includes a thermal protection device (Klixon), this must be connected to the "External fault" input of the drive.

Table 7.8.1: Technical data of the internal braking unit

Size	I_{RMS} (A)	I_{PK} (A)	R_{BR} (Ω)
ADL300-...-4, 3ph			
1040	5.5	7.8	100
1055	8.5	12	67
2075	8.5	12	67
2110	15.5	22	36
3150	22	31	26
3185	37	52	15
3220	37	52	15
4300	57	80	10
4370	57	80	10
4450	76	107	7.5
5550	76	107	7.5
5750	External Braking Unit (optional)		
ADL300-...-2T, 3ph			
2055	15.5	22	36
3075	22	31	26
3110	37	52	15
4150	57	80	10.1
4185	57	80	10.1
4220	76	107	7.5
5300	76	107	7.5
5370	External Braking Unit (optional)		

Size	I_{RMS} (A)	I_{PK} (A)	R_{BR} (Ω)
ADL300-...-2M, 1ph			
1011	5.5	7.8	86
1015	8.5	12	68
2022	8.5	12	49
2030	15.5	22	34
3040	22	31	26
3055	37	52	15

I_{RMS} Braking unit rated current, duty cycle = 50%

I_{PK} Peak current that can be delivered for max 60 seconds

R_{BR} Minimum braking resistance value

Table 7.8.2: Braking unit intervention threshold

Size	V_{BR} @ 480 V		V_{BR} @ 460 V		V_{BR} @ 400 V		V_{BR} @ 230 V	
	ON	OFF	ON	OFF	ON	OFF	ON	OFF
ADL300-...-4, 3ph								
1040 ... 3220	800 Vdc	790 Vdc	768 Vdc	758 Vdc	670 Vdc	660 Vdc	394 Vdc	384 Vdc
ADL300-...-2T, 3ph								
2055 ... 5370	-	-	-	-	-	-	394 Vdc	384 Vdc
ADL300-...-2M, 1ph								
1011 ... 3055	-	-	-	-	-	-	394 Vdc	384 Vdc

Note!

For the combination of recommended braking resistors **refer to chapter 5.4**.

8. Use of the keypad

This chapter describes the integrated keypad and the optional KB-ADL keypad and methods of use for displaying and programming inverter parameters.

8.1 Description of keypads

8.1.1 KB-ADL300 integrated keypad

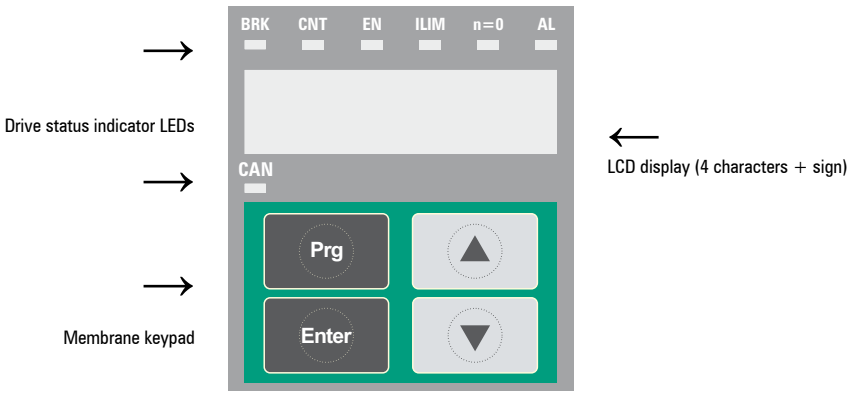

The integrated programming keypad is used to display status and diagnostics parameters during operation.

8.1.1.1 Membrane keypad

This section describes the keys on the membrane keypad and their functions

Symbol	Reference	Description
Prg		Returns to the higher level menu or submenu. Exits a parameter, and a list of parameters. It can be used to exit an error or alarm message.
Enter	Enter	Enters the submenu or selected parameter, or selects an operation. It is used when modifying parameters to confirm the new value that has been set.
▲	Up	Moves the selection up in a menu or list of parameters. During modification of a parameter, increases the value of the digit under the cursor.
▼	Down	Moves the selection down in a menu or list of parameters. During modification of a parameter, decreases the value of the digit under the cursor.

8.1.1.2 Meaning of LEDs

There are 7 drive status indicator LEDs on the front of the ADL300 drive.

LEDs	Colour	Meaning of LEDs
BRK	Yellow	The LED is lit when the drive has activated the brake release command
CNT	Yellow	The LED is lit when the drive has activated the close contactors command
EN	Green	The LED is lit during IGBT modulation (drive operating)
ILIM	Red	When this LED is lit the drive has reached a current limit condition. During normal functioning, this LED is off.
N=0	Yellow	The LED is lit when motor speed is 0.
AL	Red	The LED is lit when the drive signals that an alarm has been triggered
CAN	Green	The LED is only present in types ADL300.-...-C. LED flashes = pre-operational. LED stays on = operational. LED off = Stop.

8.1.2 KB-ADL optional programming keypad

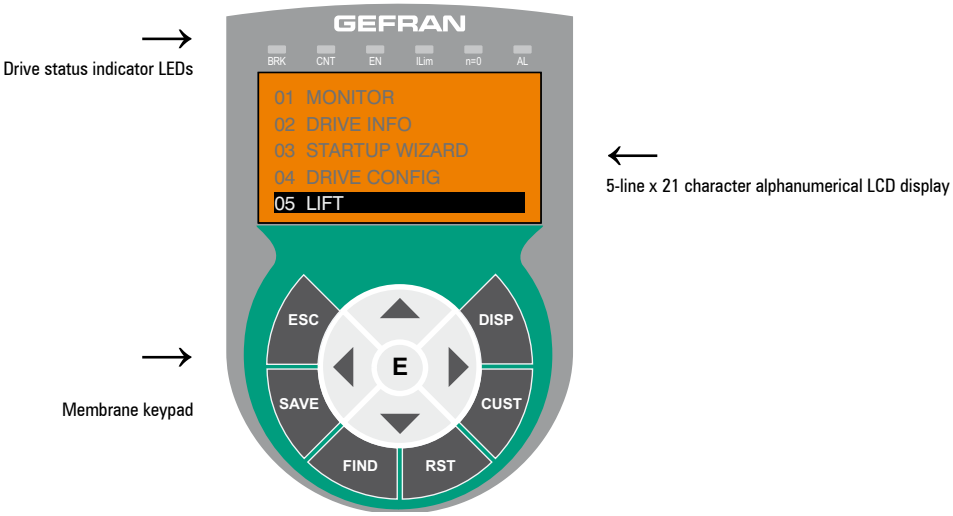

The optional programming keypad is used to display the status and diagnostics parameters during operation. It has a strip of magnetic material on the back so that it can be attached to the front of the drive or other metal surface (e.g. door of the electrical panel). The keypad can be used remotely from distances of up to 15 m. A 70 cm-long connection cable is supplied as standard. Up to 5 sets of parameters can be saved using the KB-ADL keypad and sent to other drives.

8.1.2.1 Membrane keypad

This section describes the keys on the membrane keypad and their functions

Symbol	Reference	Description
ESC	Escape	Returns to the higher level menu or submenu. Exits a parameter, a list of parameters, the list of the last 10 parameters and the FIND function. Can be used to exit a message that requires use of this.
SAVE	Save	Saves the parameters directly in the non-volatile memory without having to use **4.1 Save parameters**
FIND	Find	Enables the function for accessing a parameter using its number. To exit these functions, press the ◀ key.
RST	Reset	Resets alarms, only if the causes have been eliminated.
CUST	Custom	Displays the last 10 parameters that have been modified. To exit these functions, press the ◀ key.
DISP	Display	Displays a list of drive functioning parameters.
E	Enter	Enters the submenu or selected parameter, or selects an operation. It is used when modifying parameters to confirm the new value that has been set.
▲	Up	Moves the selection up in a menu or list of parameters. During modification of a parameter, increases the value of the digit under the cursor.
▼	Down	Moves the selection down in a menu or list of parameters. During modification of a parameter, decreases the value of the digit under the cursor.
◀	Left	Returns to the higher level menu. During modification of a parameter, moves the cursor to the left.
▶	Right	Accesses the submenu or parameter selected. During modification of a parameter, moves the cursor to the right.

8.1.2.2 Meaning of LEDs

LEDs	Colour	Meaning of LEDs
BRK	Yellow	The LED is lit when the drive has activated the brake release command
CNT	Yellow	The LED is lit when the drive has activated the close contactors command
EN	Green	The LED is lit during IGBT modulation (drive operating)
ILIM	Red	When this LED is lit the drive has reached a current limit condition. During normal functioning, this LED is off.
N=0	Yellow	The LED is lit when motor speed is 0.
AL	Red	The LED is lit when the drive signals that an alarm has been triggered

8.2 Navigating with the integrated keypad

8.2.1 Scanning of first and second level menus

First level

First level menus are shown by 2 digits.

First level Second level

Second level menus are shown by 4 digits separated by a point.
The first two indicate the first level, the second two the second level.

The numbering of the menus is that displayed on the standard keypad.
Use the up and down arrow keys to scroll the menu.
Press **Enter** to open a menu item.
Press **Prg** to go bac.

Note ! This example is only visible in Expert mode.

8.2.2 Display

- **List of parameters (IPA)**

When you access a list of parameters from the menu, the first value to be displayed is the parameter's IPA.

Scroll the list using the arrow keys.
Press **Enter** to display the value of the parameter.
Press **Prg** to return to the menu.

Only 4 characters are displayed, which means it is not possible to distinguish between regulation parameters and application parameters. Application parameters are only in menu 5. In this menu the first character on the left is not displayed, e.g.: for PAR 11002 **Travel units sel**, "**1002**" is displayed.

- **Display using "windows"**

With the optional keypad, numbers of up to 10 digits plus the sign can be displayed.
With the integrated keypad only 4 digits plus the sign are displayed.
The four digits are considered as a window on the complete number, which can alternately display the four least significant digits, the four intermediate digits or the 2 most significant digits.
The active window is always shown by a flashing point, in a different position:

> Bottom window: indicated by the flashing point of the second digit from the right:

		Top				Middle				Bottom			
Window	>>>									7	8	9.	0
Complete number	>>>			1	2	3	4	5	6	7	8	9	0

> Middle window: indicated by the flashing point of the second digit from the left:

		Top				Middle				Bottom			
Window	>>>					3	4.	5	6				
Complete number	>>>			1	2	3	4	5	6	7	8	9	0

> Top window: indicated by the flashing point of the first digit from the left:

		Top				Middle				Bottom			
Window	>>>			1.	2								
Complete number	>>>			1	2	3	4	5	6	7	8	9	0

Note !

Flashing points and characters in grey.

E.g.:

Synchronous list, Menu 19.6 - FUNCTIONS / PADS, PAR 3726 **Ramp down limit = 2147418112** :

The point flashes, the bottom window is displayed

The point flashes, the middle window is displayed

The point flashes, the top window is displayed

- **Float numbers**

In float numbers the decimal part is always in the bottom window and the middle window displays the decimal point in the first digit on the right.

> Bottom window: decimal part. Only the decimal values defined in the parameter configuration are displayed

		Top				Middle				Bottom			
Window	>>>									7	8		
Complete number	>>>					4	5	6.		7	8		

> Middle window: the decimal point is displayed in the first digit on the right

		Top				Middle				Bottom			
Window	>>>					4	5	6.					
Complete number	>>>					4	5	6.		7	8		

E.g.:

Synchronous list, Menu 14 - MOTOR DATA, PAR 2002 **Rated current = 22,4 A** :

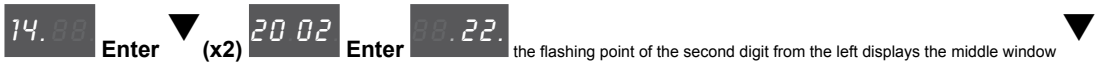

The point flashes, the decimal values are displayed in the bottom window

- **Displaying values**

To display the value of a parameter, for integer parameters the bottom window is shown first, while for float parameters the middle window is shown first.

Use the up and down arrow keys to change the window in display mode. The window scrolls cyclically to the right with the down arrow and to the left with the up arrow.

Binary values are read only values and the up and down keys can be used to scroll the bottom, middle and top part. The position displayed is shown by the flashing window indicator.

E.g., integer parameters:

Synchronous list, Menu 2 - DRIVE INFO, PAR 510 **Time drive power on** = 6:13 h.min

E.g., float parameters:

Synchronous list, MOTOR DATA, PAR 2002 **Rated current** = 22,4 A

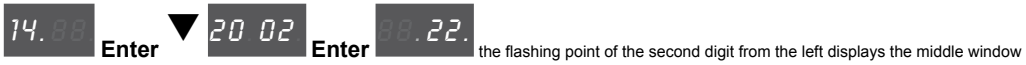

E.g., BIT parameters:

Synchronous list, Menu 1 - MONITOR, 1066 **Enable state mon** = 1

8.2.3 Changing values

Note ! Flashing points and characters in grey.

- **Changing integer numerical values**

Press **Enter** to access “Edit” mode.
The first digit on the right starts flashing, which means the value can be changed using the up and down arrow keys.
When you press **Enter** again, the next digit on the left flashes; if the digit is the last in the window, the display moves to the next window.
Pressing **Enter** on the last digit saves the value.
Press **Enter** and hold down to save the parameter even if it is not the last digit of the parameter.
Press **Prg** to exit the "Edit" mode without saving the parameter.

E.g.:

Synchronous list, Menu 5.3 – LIFT SEQUENCES, PAR 11062 **Cont close delay** (default = 200 ms)

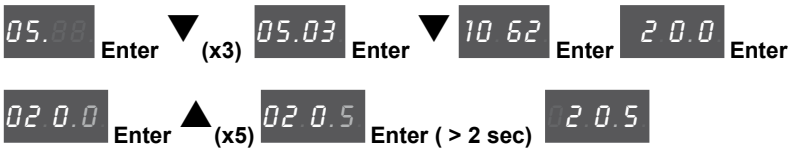

- **Changing Float numerical values**

When a float parameter is selected, the integer part is displayed first with a fixed point on the right indicating that the number continues with the decimal part.
If you press **Enter** in this state, only the integer part is changed.
To modify the decimal part as well, first display the bottom window by pressing the down arrow key, then press **Enter** to modify the number from the decimal part.
Press **Prg** to exit the "Edit" mode without saving the parameter.

E.g.:

Synchronous list, Menu 5.2 – RAMPS, PAR 11040 **Acc ini Jerk** (default = 0.50 m/s^3)

- **Modifying Enum values**

When you press **Enter** on an Enum value, the first digit on the right flashes.
Use the arrow keys to scroll all the enum values of that parameter cyclically.
Press **Enter** again to accept the value.
Press **Prg** to reject the value and restore the previous value.

E.g.:

Synchronous list, Menu 5.3 – LIFT SEQUENCES, PAR 11060 **Sequence start mode** (default = [0] **Start forward/reverse**)

- **Modifying Link values**

When you press **Enter** on a Link value, the first digit on the right flashes.
Use the arrow keys to scroll all the links in the list associated with that parameter cyclically.
Press **Enter** again to accept the value.
Press **Prg** to reject the value and restore the previous value.

E.g.:

Synchronous list, Menu 11 – DIGITAL OUTPUTS, PAR 1410 **Dig output 1X src** (default = [1062] **Drive OK**)

- **Modifying On-Off values**

Boolean values are displayed with the words On and Off.
When you press **Enter**, the first digit on the right flashes.
Use the up and down arrow keys to change the value cyclically from On to Off.
Press **Enter** again to accept the value.
Press **Prg** to reject the value and restore the previous value.

E.g.:

Synchronous list, Menu 5.5 – DISTANCE, PAR 11138 **Out floor function** (default = [0] **OFF**)

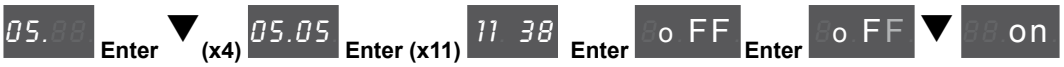

8.2.4 Error messages when modifying a parameter

When accepting a value, if you hold **Enter down** or press **Enter on** the last digit, an error message may be displayed:

RO	Read only parameter, if **Enter** is pressed on a read only parameter
ORNG	Value outside range
DRVE	Drive enabled, if you are trying to modify a parameter than cannot be modified with the drive enabled
ERR	Other errors

Press **Prg** to clear the error message.

8.2.5 Displaying and closing Messages

Note !

Some messages may be displayed on the integrated keypad at start-up or during operation. The list of messages is provided in chapter "10.3 Messages" . Sub-codes are not shown on the integrated keypad.

Press **Prg** to exit a message if it does not close automatically**.**

8.2.6 Displaying and resetting Alarms

Note ! The alarms are shown on the display of the integrated keypad with the abbreviated text shown in brackets "[XXX]" in chapter "10.1 Alarms" on page 88.

Active alarms are displayed by a flashing indicator.
Alarms that have been removed but not yet reset are fixed.
If there is more than one alarm, these can be displayed using the up and down arrow keys.
Press Prg to exit the alarm display mode.
To reset an alarm, press the up and down arrow keys together.

To display the sub-codes, press **Enter**:

E.g.:

Enter

Prg

Index	Error message shown on the display [on the integrated keypad]	Sub-code	Description
47	Error config plc [PLCE]	**Condition:** may occur during loading of the Mdplc application The Mdplc application present on the drive is not run.	
		0004H-4	The application downloaded has a different Crc on DataBlock and Function table

8.2.6.1 Alarm Log

Enter menu 22 - ALARM LOG to display the list of alarms
Use the arrow keys to scroll the list with the abbreviations shown in chapter 10.1.
Press **Enter** to display the alarm code.

8.2.7 Startup wizard

Enter Menu 3 - STARTUP WIZARD to scroll the list of operations, which are abbreviated as follows:

Operations displayed on the optional keypad	Operations displayed on the integrated keypad
Set motor data?	**MOT**
Run autotune still?	**STIL**
Set encoder param?	**ENC**
Set max motor speed?	**MSPD**
Set max car speed?	**CSPD**
Set system weights?	**WEIG**
Set application par?	**LIFT**
Save parameters?	**SAVE**
End of sequence!	**END**

Press Enter to enter the selected operation.
At this point, the list of associated parameters that must be modified as described previously is displayed.
Motor self-tuning is described below.
Press the down arrow to move on to the next operation.
Press the up arrow to return to the previous operation.
Press **Prg** to abort the STARTUP WIZARD sequence.

Note ! The STARTUP WIZARD cannot run simultaneously on the two keypads (integrated and optional).
When running on one, it cannot be accessed from the other.

Note ! For further information see chapters "9.1 Asynchronous motor startup wizard" on page 81 and "9.2 Startup wizard for brushless motors on page 93.

8.2.8 Motor self-tuning

Set PAR 2024 Autotune still to **On** to enable motor self-tuning.
The firmware will automatically reset it to **Off**.

The following warning messages are displayed at the start and end of Self-tuning:

Operations displayed on the optional keypad	Operations displayed on the integrated keypad
Close Enable input	**C EN**
Open Enable input	**O EN**

When the self-tuning procedure is executed its progress is displayed. In this phase the first digit on the right indicates the progress of the procedure by rotating the external segments of the display.

If an error occurs, the word **Er** is displayed with the error code. Press **Prg** to exit the error.

Note ! For further information see chapters "9.1 Asynchronous motor startup wizard" on page 81 and "9.2 Startup wizard for brushless motors on page 93.

8.2.9 Asynchronous/Synchronous selection

- **To switch from Asynchronous to Synchronous:**

Menu 4 - DRIVE CONFIG, PAR 6100 **Load synch control**

Press **Enter** to reset the drive and restart in the new operating mode.

Note ! Important: the default parameters including the LIFT application are reloaded.
This can only be done with the drive disabled.

- **To switch from Synchronous to Asynchronous:**

Menu 4 - DRIVE CONFIG, PAR 6100 **Load synch control**

Press Enter to reset the drive and restart in the new operating mode.

Note ! Important: the default parameters including the LIFT application are reloaded.
This can only be done with the drive disabled.

8.2.10 Correspondence table displayed character/alphabet

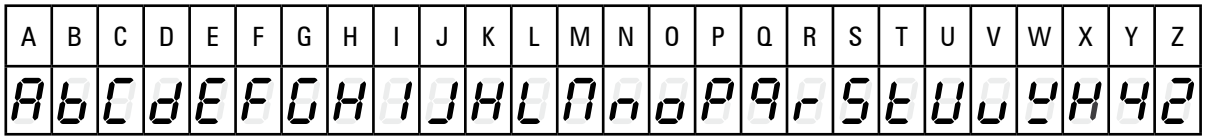

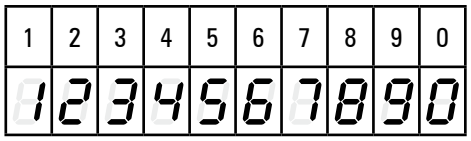

8.3 Navigating with the optional keypad

8.3.1 Scanning of the first and second level menus

First level

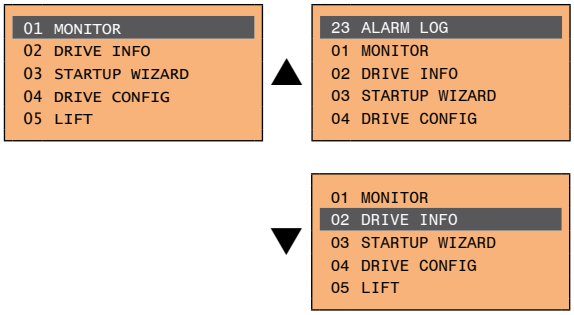

First level Second level

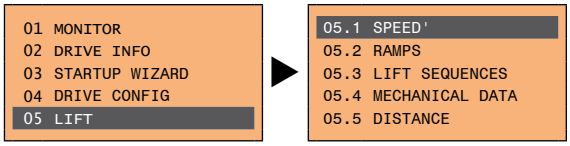

Note!

This example is only visible in Expert mode.

8.3.2 Display of a parameter

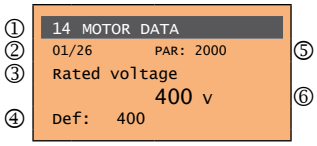

(1) Reference to the menu where the parameter is to be found (in this case menu 14 - MOTOR DATA)

(2) Position of the parameter in the menu structure (01)

(3) Description of the parameter (Rated voltage)

(4) Depends on the type of parameter:

- Numeric parameter: displays the numeric value of the parameter, in the format required, and unit of measurement.
- Binary selection: the parameter may assume only 2 states, indicated as **On** - **Off** or 0 - 1.
- LINK type parameter: displays the description of the parameter set from the selection list.
- ENUM type parameter: displays the description of the selection
- Command: displays the method of execution of the command

(5) Parameter number

(6) In this position, the following may be displayed:

- Numeric parameter: displays the default, minimum and maximum values of the parameter. These values are displayed in sequence pressing the ► key.
- LINK type parameter: displays the number (PAR) of the parameter set.
- ENUM type parameter: displays the numeric value corresponding to the current selection.
- Command: in the case of an error in the command, indicates that **ESC** must be pressed to terminate the command.
- Messages and error conditions:

Param read only	attempt to modify a read-only parameter
Password active	the parameter protection password is active
Drive enabled	attempt to modify a non-modifiable parameter with the drive enabled
Input value too high	the value entered too high
Input value too low	the value entered too low
Out of range	attempt to insert a value outside the min. and max. limits

8.3.3 Scanning of the parameters

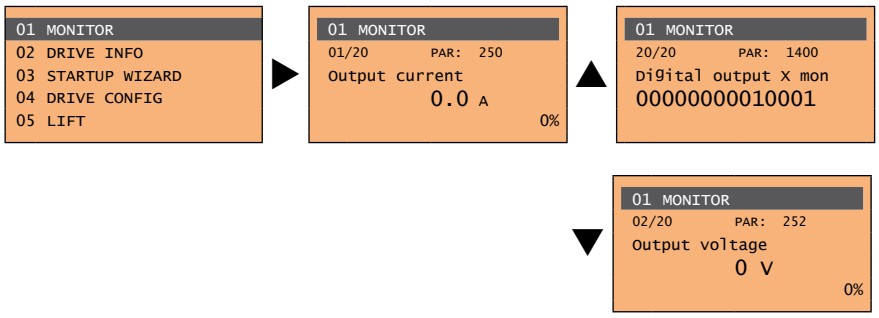

8.3.4 List of the last parameters modified

Pressing the **CUST** key, a list containing the last 10 parameters modified is accessed. One parameter is displayed at a time and the list can be scrolled using the ▲ and ▼ keys.
To exit this list, press the ► key.

8.3.5 "FIND" function

Pressing the **FIND** key activates the function that makes it possible to access any parameter simply by entering the parameter software number (PAR).
When the parameter reached by the "**FIND**" command is displayed, it is possible to navigate all the parameters forming part of the same group using the ▲ and ▼ keys. Pressing the ► key returns to the "**FIND**" function.
To exit, press the ► key.

8.3.6 Parameter modification

To enter parameter modification mode, press the **E** key when the parameter to be modified is displayed.
To save the value of the parameter, following modification, press the **E** key again.

Note! To save permanently, see paragraph 8.3.7.

To exit modification mode without saving the value, press the **ESC** key.
The operations to be carried out to modify the value depend on the type of the parameter, as described below.

Note! For further information about the type of parameters displayed, see paragraph 8.3.2.

- **Numeric parameters**

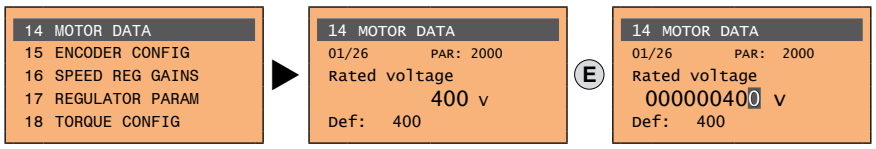

When **E** is pressed to access modification mode, the cursor is activated on the digit corresponding to the unit.
Using the ◄ and ► keys, the cursor can be moved to all the digits, including trailing zeros that are normally not displayed.
With the ▲ and ▼ keys, the digit under the cursor is increased or decreased.
Press **E** to confirm the modification or **ESC** to cancel.

- **Binary parameters (BIT type)**

The parameter may assume only two states which are indicated as **On**-**Off** or 0-1.

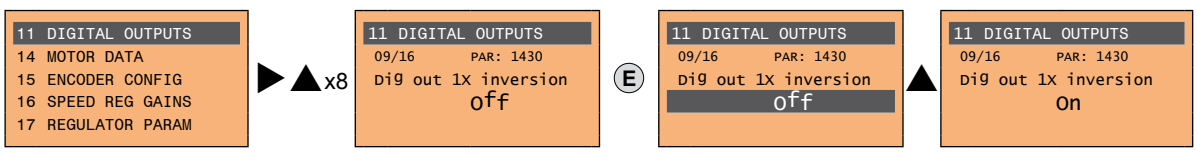

Press **E** to activate modification mode. The entire line is displayed in reverse. Use the ▲ and ▼ keys to move from one state to another. Press **E** to confirm the modification or **ESC** to cancel.

- **LINK parameters**

The parameter may assume the number of another parameter as value.

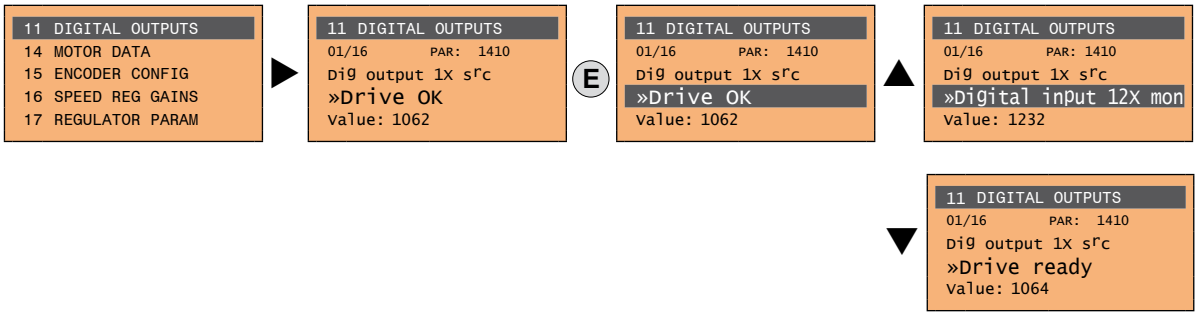

Press **E** to activate modification mode. The entire line is displayed in reverse. The elements of the list of parameters associated with this parameter can be scrolled using the ▲ and ▼ keys.
Press **E** to confirm the modification or **ESC** to cancel.

- **ENUM parameters**

The parameter may assume only the values contained in a selection list.

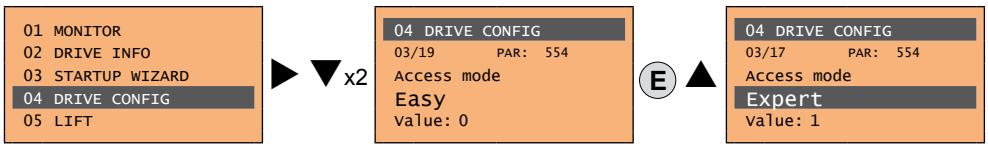

Press **E** to activate modification mode. The entire line is displayed in reverse. The elements of the selection list can be scrolled using the ▲ and ▼ keys.
Press **E** to confirm the modification or **ESC** to cancel.

- **Execution of commands**

A parameter can be used to carry out a number of operations on the drive. For an example, see next paragraph: in this case the request "**Press E to execute**" is displayed.
To execute the command, press **E**. During execution of the command, the "**In progress**" caption is displayed to indicate that the operation is in course. At the end of execution, if the result is positive, the "**Done**" caption is displayed for few seconds. If execution has failed, an error message is displayed.

8.3.7 How to save parameters

There are two ways of saving parameters in the non-volatile memory of the drive:

1) By pressing the **SAVE** key on the keypad.
2) Menu 04 DRIVE CONFIG, parameter 04.01 **Save parameters**, PAR : 550. This is used to save changes to parameter settings so that they are maintained even after power-off.

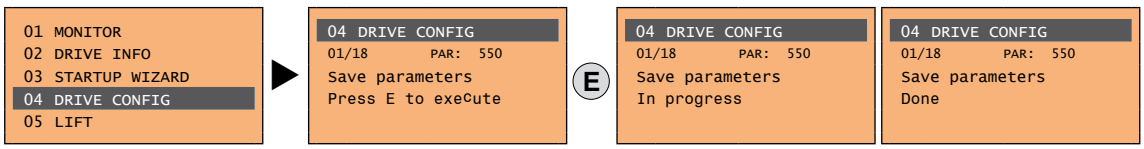

To exit, press the ◄ key.

8.3.8 Configuration of the display

8.3.8.1 Language selection

Menu 04 DRIVE CONFIG, parameter 04.19 **Language select**, PAR: 578,
default=English. This is used to set one of the languages available: English, Italian, French, German, Spanish and Turkish.

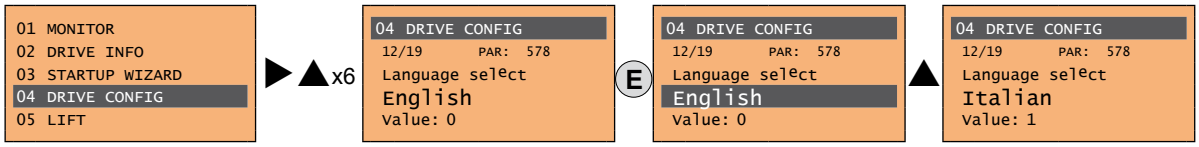

Press **E** to confirm the modification or **ESC** to cancel.

8.3.8.2 Selection of Easy/Expert mode

Menu 04 DRIVE CONFIG, parameter 04.03 **Access mode**, PAR: 554.
Enables two methods of access to be configured:
Easy (default) only the main parameters are displayed
Expert for advanced users, all the parameters are displayed

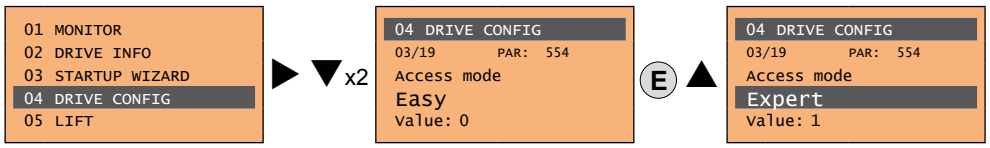

8.3.9 Startup display

Menu 04 DRIVE CONFIG, parameter 04.9 **Startup display**, PAR: 574.
This is used to set the parameter that will be displayed automatically at drive power-on.
Entering the value -1 (default), the function is disabled and the main menu is displayed at power-on.

8.3.10 Back-lighting of the display

Menu 04 DRIVE CONFIG, parameter 04.10 **Display backlight**, PAR: 576. Sets lighting of the display:
On the light of the display always stays on.
Off (default) the light switches off approx. 3 minutes after the last key is pressed.

8.3.11 Alarms

The alarms page is displayed automatically when an alarm occurs.

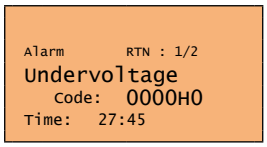

(1) **Alarm**: identifies the alarm page.
RTN: indicates that the alarm has been reset; if the alarm is still active, nothing is displayed.
x/y: **x** indicates the position of this alarm in the list of alarms and **y** the number of alarms (the alarm with lowest x is the most recent)

(2) Description of the alarm

(3) Sub-code of the alarm, provides other information in addition to the description

(4) Moment the alarm occurred in machine time.

The list of alarms is scrolled using the ▲ and ▼ keys.

Note!

For further information, see **chapter 10.1**.

8.3.11.1 Alarm reset

- **If the alarm page is displayed:**
  Pressing the **RST** key, the alarms are reset and all alarms that have been reset are eliminated from the list. If, after this operation, the list of alarms is empty, the alarm page is closed. If the list is not empty, press the ► key to exit the alarms page.
- **If the alarm page is not displayed:**
  Press the **RST** key to reset the alarms. If active alarms are still present following reset, the alarm page is opened.

8.3.12 Messages

Operator messages are displayed with this page.
There are two types of messages:
- timed (closed automatically after a certain number of seconds),
- permanent (continue to be displayed until the operator presses the **ESC** key).

Several concurrent messages are enqueued and presented to the operator in sequence, starting from the most recent.

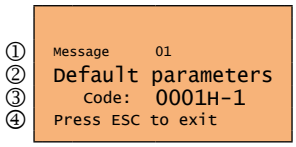

(1) **Message**: identifies a message.
xx indicates how many messages are enqueued. The queue may contain a maximum of 10 messages and the message with the highest number is the most recent.
(2) Description of the message
(3) Sub-code of the message. Provides extra information in addition to the description.
(4) "**Press ESC to exit**" is displayed if the message requires acknowledgment.

When a message is closed, the next message is displayed until the queue is empty.

Note! For further information, see chapter 10.3.

8.3.13 Saving and recovery of new parameter settings

Drive parameters can be saved on the keypad in 5 different memory areas. This function is useful for obtaining various sets of parameters, for safety backup or transferring parameters from one drive to another.

8.3.13.1 Selection of the keypad memory

Note! This example is only visible in Expert mode.

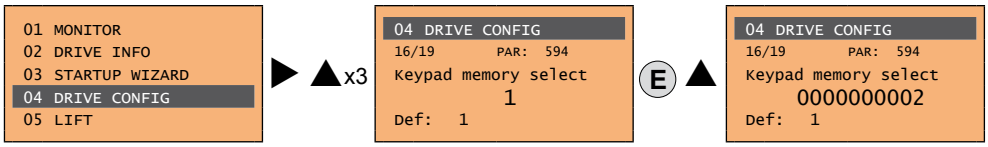

Menu 04 DRIVE CONFIG, parameter 04.16 **Keypad memory select**, PAR: 594. The keypad features 5 memory areas dedicated to saving parameters.
The memory to be used is selected using the **Keypad memory select** parameter. Subsequent saving and recovery operations will be carried out on the memory selected.

8.3.13.2 Saving of parameters on the keypad

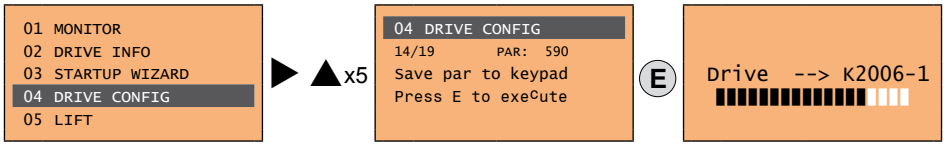

Menu 04 DRIVE CONFIG, parameter 04.14 **Save par to keypad**, PAR: 590. This is used to transfer the parameters from the drive to the selected keypad memory. To start the operation, press the **E** key.
During transfer, a bar is displayed which indicates progress of the operation.
Instead of the letter **X**, the number of the currently selected keypad memory is displayed.
At the end of transfer, if this has been completed successfully, the "**Done**" caption is displayed for a few seconds with subsequent return to the initial page.

If an error occurs during transfer, the following message is displayed:

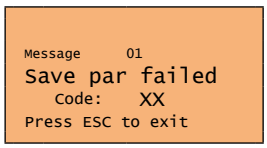

The code **XX** indicates the type of error, see **paragraph 10.3**. To exit the error message, press the **ESC** key.

8.3.13.3 Load parameters from keypad

Menu 04 DRIVE CONFIG, parameter 04.15 **Load par from keypad**, PAR: 592. This is used to transfer the parameters from the selected memory of the keypad to the drive.

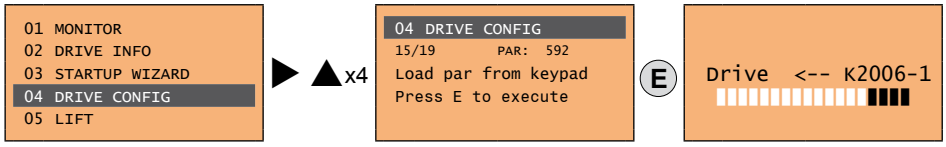

To start the operation, press the **E** key. During transfer, a bar is displayed which indicates progress of the operation. Instead of the letter **X**, the number of the currently selected keypad memory is displayed.
At the end of transfer, if this has been completed successfully, the "**Done**" caption is displayed for a few seconds with subsequent return to the initial page.
If an error occurs during transfer, the following message is displayed:

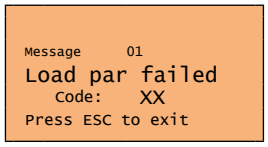

The code **XX** indicates the type of error, see **paragraph 10.3**. To exit the error message, press the **ESC** key.

8.3.13.4 Transfer of parameters between drives

Transfer the parameters of the source drive to the keypad memory as indicated in paragraph 8.3.13.2, then connect the keypad to the drive where the new setting is to be saved and follow the procedure described in paragraph 8.3.13.3.

Caution

To prevent possible damage to equipment, it is advisable to disconnect and connect the keypad with the drive off.

8.3.14 Saving and recovery of new parameter settings on memory card

To save drive parameters on the memory card (SD-Secure Digital): Menu 04 DRIVE CONFIG, parameter 04.17 **Save to SD card**, PAR:

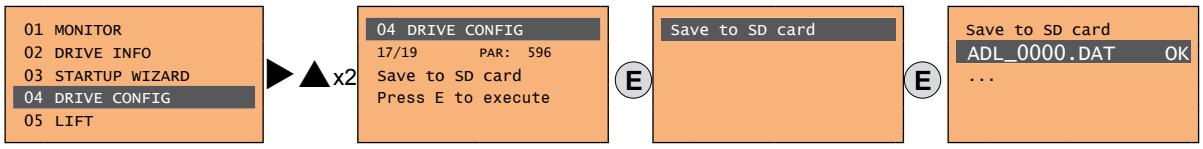

To transfer (recover) parameters from the memory card (SD-Secure Digital) to the drive: Menu 04 DRIVE CONFIG, parameter 04.18 **Load from SD card**, PAR 598:

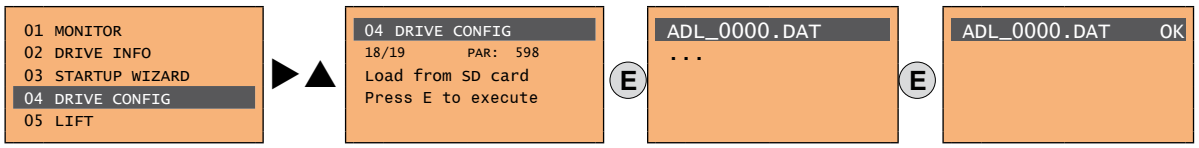

8.3.15 Asynchronous/Synchronous selection

- **To switch from Asynchronous to Synchronous:**

Menu 4 - DRIVE CONFIG, PAR 6100 **Load synch control**

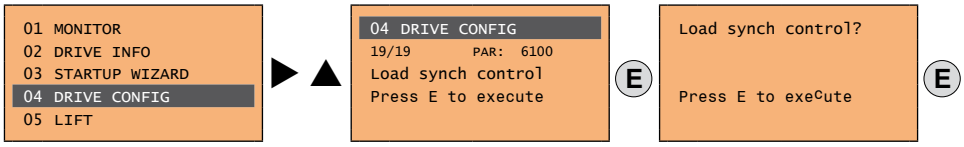

Press **E** to reset the drive and restart in the new operating mode.

Note !

Important: the default parameters including the LIFT application are reloaded.

This can only be done with the drive disabled.

- **To switch from Synchronous to Asynchronous:**

Menu 4 - DRIVE CONFIG, PAR 6100 **Load synch control**

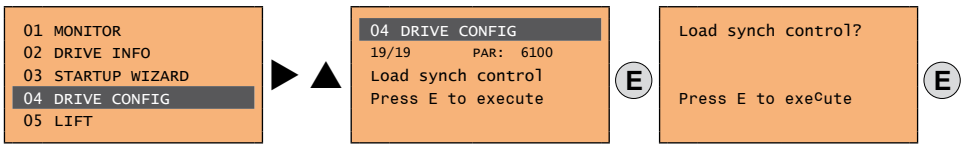

Press **E** to reset the drive and restart in the new operating mode.

Note !

Important: the default parameters including the LIFT application are reloaded.

This can only be done with the drive disabled.

9 - Commissioning via keypad

Warning!

Adjustable frequency drives are electrical apparatus for use in industrial installations. Parts of the Drives are energized during operation. The electrical installation and the opening of the device should therefore only be carried out by qualified personnel. Improper installation of motors or Drives may therefore cause the failure of the device as well as serious injury to persons or material damage. Drive is not equipped with motor overspeed protection logic other than that controlled by software. Follow the instructions given in this manual and observe the local and national safety regulations applicable.

Les drives à fréquence variable sont des dispositifs électriques utilisés dans des installations industriels. Une partie des drives sont sous tension pendant l'operation. L'installation électrique et l'ouverture des drives devrait être executé uniquement par du personel qualifié. De mauvaises installations de moteurs ou de drives peuvent provoquer des dommages materiels ou blesser des personnes. On doit suivir les instructions donneés dans ce manuel et observer les régles nationales de sécurité.

Always connect the Drive to the protective ground ⏚ (PE) via the marked connection.
ADL300 Drives and AC Input filters have ground discharge currents greater than 3.5 mA. EN 50178 specifies that with discharge currents greater than 3.5 mA the protective conductor ground connection (⏚) must be fixed type and doubled for redundancy.
Il faut toujours connecter le variateur à la terre ⏚ (PE). Le courant de dispersion vers la terre est supérieur à 3,5 mA sur les variateurs et sur les filtres à courant alterné. Les normes EN 50178 spécifient qu'en cas de courant de dispersion vers la terre, supérieur à 3,5 ma, la mise à la terre (⏚) doit avoir une double connexion pour la redondance.

Only permanently-wired input power connections are allowed. This equipment must be grounded (IEC 536 Class 1, NEC and other applicable standards).
If a Residual Current-operated protective Device (RCD) is to be used, it must be an RCD type B. Machines with a three phase power supply, fitted with EMC filters, must not be connected to a supply via an ELCB (Earth Leakage Circuit-Breaker - see DIN VDE 0160, section 5.5.2 and EN50178 section 5.2.11.1).
The following terminals can carry dangerous voltages even if the inverter is inoperative:
- the power supply terminals L1, L2, L3, C1, C, D.
- the motor terminals U, V, W.

This equipment must not be used as an 'emergency stop mechanism' (see EN 60204, 9.2.5.4).

Seuls des branchements électriques permanents par câble en entrée sont admis. Mettre l'appareil à la masse (IEC 536 Classe 1, NEC et autres normes applicables).
S'il s'avère nécessaire d'utiliser un dispositif protecteur de courant résiduel (RCD), il convient de choisir un RCD de type B. Les machines à alimentation triphasée et dotées de filtres EMC ne doivent pas être raccordées au bloc d'alimentation par le biais d'un disjoncteur ELCB (Earth Leakage Circuit-Breaker – cf. DIN VDE 0160, paragraphe 5.5.2 et EN50178 paragraphe 5.2.11.1).
Les bornes suivantes peuvent recevoir des tensions dangereuses, même si l'onduleur est désactivé :
- bornes d'alimentation L1, L2, L3, C1, C, D.
- bornes du moteur U, V, W.
Ne pas utiliser cet appareil en tant que « dispositif d'arrêt d'urgence » (cf. EN 60204, 9.2.5.4)

Do not touch or damage any components when handling the device. The changing of the isolation gaps or the removing of the isolation and covers is not permissible.

Manipuler l'appareil de façon à ne pas toucher ou endommager des parties. Il n'est pas permis de changer les distances d'isolement ou bien d'enlever des matériaux isolants ou des capots.

According to the EEC standards the ADL300 and accessories must be used only after checking that the machine has been produced using those safety devices required by the 89/392/EEC set of rules, as far as the machine industry is concerned. These standards do not apply in the Americas, but may need to be considered in equipment being shipped to Europe.

Selon les normes EEC, les drives ADL300 et leurs accessoires doivent être employés seulement après avoir verifié que la machine ait été produit avec les même dispositifs de sécurité demandés par la réglementation 89/392/EEC concernant le secteur de l'industrie.

ADL300 operate at high voltages.

L'ADL300 fonctionne à des tensions élevées.

When operating electrical devices, it is impossible to avoid applying hazardous voltages to certain parts of the equipment.

L'actionnement de dispositifs électriques fait qu'il est impossible d'éviter l'application de tensions dangereuses sur certaines parties de l'appareil.

Wherever faults occurring in the control equipment can lead to substantial material damage or even grievous bodily injury (i.e. potentially dangerous faults), additional external precautions must be taken or facilities provided to ensure or enforce safe operation, even when a fault occurs (e.g. independent limit switches, mechanical interlocks, etc.).

Adopter des mesures de précaution supplémentaires à l'extérieur du drive (par exemple, des interrupteurs de fin de course, des interrupteurs mécaniques, etc.) ou fournir des fonctions aptes à garantir ou à mettre en place un fonctionnement sécurisé en cas de survenue d'une panne de l'appareil de commande susceptible d'occasionner des dégâts matériels d'envergure, voire même des lésions corporelles graves (par exemple, des pannes potentiellement dangereuses).

Certain parameter settings may cause the inverter to restart automatically after an input power failure.

Certaines configurations de paramètres peuvent provoquer le redémarrage automatique de l'onduleur après une coupure de l'alimentation.

This equipment is suitable for use in a circuit capable of delivering not more than 10,000 symmetrical amperes (rms), for a maximum voltage of 480 V.

Cet appareil est conçu pour une utilisation sur un circuit d'alimentation en mesure de délivrer 10.000 ampères symétriques (rms) maximum pour une tension maximale de 480V.

This equipment must not be used as an 'emergency stop mechanism' (see EN 60204, 9.2.5.4).

Ne pas utiliser cet appareil en tant que « dispositif d'arrêt d'urgence » (cf. EN 60204, 9.2.5.4).

Never open the device or covers while the AC Input power supplyis switched on. Minimum time to wait before working on the terminals or inside the device is listed **in section 4.6**.

Ne jamais ouvrir l'appareil lorsqu'il est suns tension. Le temps minimum d'attente avant de pouvoir travailler sur les bornes ou bien àl'intérieur de l'appareil est indiqué dans la section 4.6.

Fire and Explosion Hazard:
Fires or explosions might result from mounting Drives in hazardous areas such as locations where flammable or combustible vapors or dusts are present. Drives should be installed away from hazardous areas, even if used with motors suitable for use in these locations.

Risque d'incendies et d'explosions.
L'utilisation des drives dans des zônes à risques (présence de vapeurs ou de poussières inflammables), peut provoquer des incendies ou des explosions. Les drives doivent être installés loin des zônes dangeureuses, et équipés de moteurs appropriés.

Caution

Protect the device from impermissible environmental conditions (temperature, humidity, shock etc.).
Protéger l'appareil contre des effets extérieurs non permis (température, humidité, chocs etc.).

To the output of the drive (terminals U, V, W) :
- no voltage should be connected to the output of the drive
- the parallel connection of several drives are not permissible.
- the direct connection of the inputs and outputs (bypass) are not permissible.
- capacitative load (e.g. Var compensation capacitors) should not be connected.

à la sortie du convertisseur (bornes U, V et W) :
- aucune tension ne doit être appliquée
- aucune charge capacitive ne doit être connectée
- il n'est paspermis de raccorder la sortie de plusieurs convertisseurs en parallèle
- l n'est paspermis d'effectuer une connexion directede l'entrée avec la sortie du convertisseur (Bypass).

The electrical commissioning should only be carried out by qualified personnel, who are also responsible for the provision of a suitable ground connection and a protected power supply feeder in accordance with the local and national regulations. The motor must be protected against overloads.

La mise en service électrique doit être effectuée par un personnel qualifié. Ce dernier est responsable del'existence d'une connexion de terre adéquate et d'une protection des câbles d'alimentation selon les prescriptions locales et nationales. Le moteur doit être protégé contre la surcharge.

Do not connect power supply voltage that exceeds the standard specification voltage fluctuation permissible. If excessive voltage is applied to the Drive, damage to the internal components will result.

Ne pas raccorder de tension d'alimentation dépassant la fluctuation de tension permise par les normes. Dans le cas d' une alimentation en tension excessive, des composants internes peuvent être endommagés.

Do not operate the Drive without the ground wire connected.
The motor chassis should be grounded to earth through a ground lead separate from all other equipment ground leads to prevent noise coupling.

Ne pas faire fonctionner le drive sans prise de terre.
Le chassis du moteur doit être mis à la terre à l'aide d'un connecteur de terre separé des autres pour éviter le couplage des perturbations.

No dielectric tests should be carried out on parts of the drive. A suitable measuring instrument (internal resistance of at least 10 kΩ/V) should be used for measuring the signal voltages.

Il ne faut pas éxécuter de tests de rigidité diélectrique sur des parties du convertisseurs. Pour mesurer les tensions, des signaux, il faut utiliser des instruments de mesure appropriés (résistance interne minimale 10kΩ/V).

Note!

This chapter describes commissioning using the optional keypad.

For use of the integrated keypad, reference should be made to chapter "8.2 Navigating with the integrated keypad" on page 59.

9.1 Asynchronous motor startup wizard (with the integrated keypad)

The ADL300 can operate with regulation modes: Voltage/Frequency (SSC) , Sensorless (open loop) and field-oriented vector control (closed loop).

Note!

Before starting, check the factory settings:

Menu 02 DRIVE INFO, parameter 02.2 **Control type**, PAR: 480, default=11.

Menu 04 DRIVE CONFIG, parameter 04.2 **Regulation mode**, PAR: 552, default=SSC control.

The STARTUP WIZARD is a guided procedure used for quick start-up of the drive that helps to set the main parameters.
It consists of a series of questions, relating to the various sequences for entering and calculating the parameters necessary for correct drive and lift application operation. The order of these sequences is as follows:

- **Electrical connections** **See step 1**
- **Setting motor parameters** **See step 2**
- **Autotune with motor at stand-still or coupled to the load** **See step 3**
- **Setting encoder parameters** (with control mode=Flux vector CL) **See step 4**
- **Setting the maximum speed reference and maximum system speed** **See step 6**
- **Setting system weights** **See step 7**
- **Setting application parameters** **See step 8**
- **Saving parameters** **See step 9**

The format of the function selection page is as follows:

Pressing the **Enter** key, the function to be programmed is accessed.
Press the ▼ (Down) key to move to the next function skipping the current function.
Press the ▲ (Up) key to return to the previous function.
To terminate the sequence of functions and return to the menu, press the **Prg** key.

The end of the start-up sequence is indicated with the page:

Press the **Prg** key to exit the sequence and return to the menu.

Step 1 - Electrical connections

Make the connections as described in paragraph 7.3.2.

Checks to be performed before powering the drive

- Check that the supply voltage is correct and that the input terminals on the drive (L1, L2 and L3) are connected correctly.
- Check that the output terminals on the drive (U, V and W) are connected to the motor correctly.
- Check that all the drive control circuit terminals are connected correctly. Check that all control inputs are open.

Powering the drive

- After completing all the checks described above, power the drive and proceed to step 2.

Step 2 - Setting motor parameters

Note! **Def:** The factory (default) setting depends on the size of the drive that is connected. These values refer to the ADL..-1055-AC

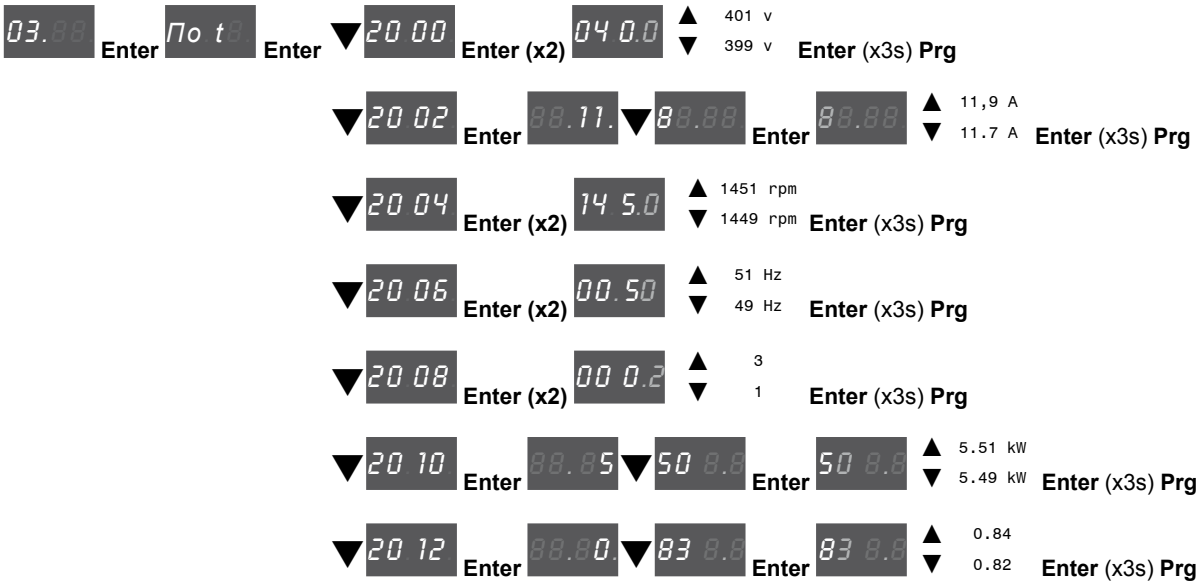

Set the plate data of the motor connected, according to the procedures described above.

Rated voltage [V]:	the rated voltage of the motor indicated on the data plate.
Rated current [A]:	motor rated current; approximately, the value should not be less than 0.3 times the rated current of the drive, output current class 1 @ 400 V on the data plate of the drive.
Rated speed [rpm]:	rated speed of the motor; this value must reflect the speed of the fully loaded motor at rated frequency. If slip is indicated on the motor data plate, set the Rated speed parameter as follows: Rated speed = Synchronous speed - Slip (e.g. for a 4-pole motor Rated speed = 1500 - 70 = 1430).
Rated frequency [Hz]:	rated frequency of the motor, as shown on the data plate (asynchronous motors only).
Pole pairs:	Number of motor pole pairs. The number of motor pole pairs is calculated using the plate data and the following formula: P = 60 [s] x f [Hz] / nN [rpm] Where: P = motor pole pairs, f = motor rated frequency (e.g. 50); nN = motor rated speed (e.g. 1450)
Rated power [kW]:	Motor rated power; for a motor data plate with an HP power value, set the rated power kW = 0.736 x the motor power HP value.
Rated power factor:	Leave the default rated power factor if the data are not available on the data plate.

Note! When data entry is complete the **Take parameters** command is executed automatically (menu 14 MOTOR DATA, PAR: 2020). The motor data entered during the STARTUP WIZARD procedure are saved in a RAM memory to enable the drive to perform the necessary calculations.

These data are lost if the device is switched off. To save the motor data follow the procedure described in step 9.

At the end of the procedure proceed to step 3. Press the **Prg** and ▼ keys.

Step 3 - Autotune with motor at stand-still or coupled to the load

The drive carries out the motor autotune procedure (real measurement of motor parameters).
There are two self-tuning modes: **Reduced** (default) and **Extended**, which can be selected using parameter 2026 **Autotune mode**. The reduced procedure is fast and recommended in most cases. The extended procedure can be used to achieve maximum efficiency, but may take several minutes.

Note! If this operation generates an error message (e.g. Error code 1), check the connections of the power and control circuits (see **step 1** - Connections), check the motor data settings (see **step 2** - Setting motor parameters) and then repeat the guided Autotune procedure.

(1) Press the **Enter** key to proceed to the autotune procedure.

(2) Press the **Enter** key to start the autotune procedure.

(3) Enable the drive by connecting terminal 9 on the I/O card (Enable) to terminal 12 (+24 V). To abort this operation, press the **Prg** key.

(4) Once the drive is enabled the autotune procedure starts. This may take a few minutes, depending on the type of motor being used.

(5) At the end of the procedure the following screen is displayed. After opening the Enable contact, go to step 4 (if using a feedback card) or 6 to proceed with the wizard. Press the **Prg** x2 and ▼ keys.

Note!

At the end of the autotune procedure there is a request to open the Enable contact (terminals 9 - 12); this results in the automatic execution of the **Take tune parameters** command (menu 14 MOTOR DATA, PAR: 2078).

The calculated parameters are saved in a RAM memory to enable the drive to perform the necessary calculations. These data are lost if the device is switched off. To save the motor data follow the procedure described in step 6.

Step 4 - Setting encoder parameters (only if a feedback card is installed)

Caution

The incorrect configuration of the encoder tension can permanently damage the device; therefore, it is advisable to check the values on the encoder's specification plate.

If the drive is to be used in closed loop mode, a check must be run to make sure that an encoder feedback card is installed (standard EXP-DE-I1R1F2-ADL); make the connections as described in paragraph 7.2.3 and set the following parameters for the encoder installed on the motor:

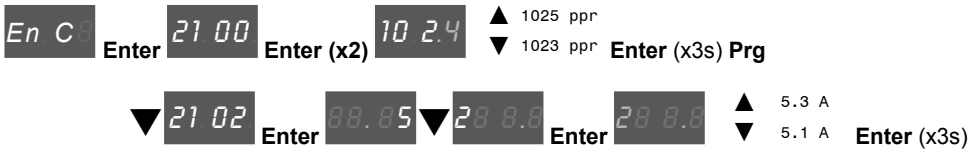

At the end of the procedure proceed to step 6. Press the **Prg x2** and ▼ keys.

Step 5 – Encoder phasing

Not available in this mode.

Step 6 - Setting the maximum speed reference value and system speed

Setting the maximum speed reference value: this defines the maximum motor speed value (in rpm) that can be reached with each single reference signal (analog or digital).

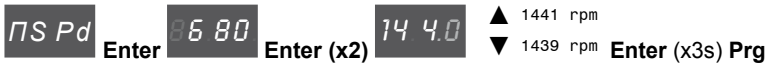

Set the maximum system speed in m/s

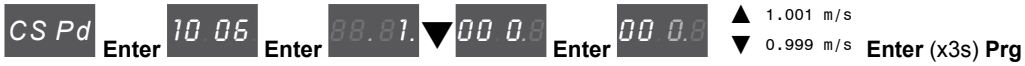

After setting the speed, proceed to step 7 to set the system weights. Press the **Prg x3** and ▼ keys.

Note!

The factory (default) setting depends on the size of the drive that is connected. These values refer to the ADL..-1055-AC

Step 7 - Setting the system weights

The system weights must be entered in this part of the wizard procedure.

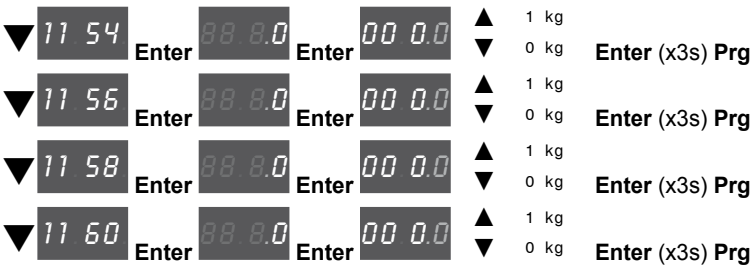

After setting the mechanical measurements, proceed to the next step. Press the **Prg** x2 and ▼ keys.

Step 8 - Setting application parameters

The application data can be entered at this stage.

- **Set the multispeed values**

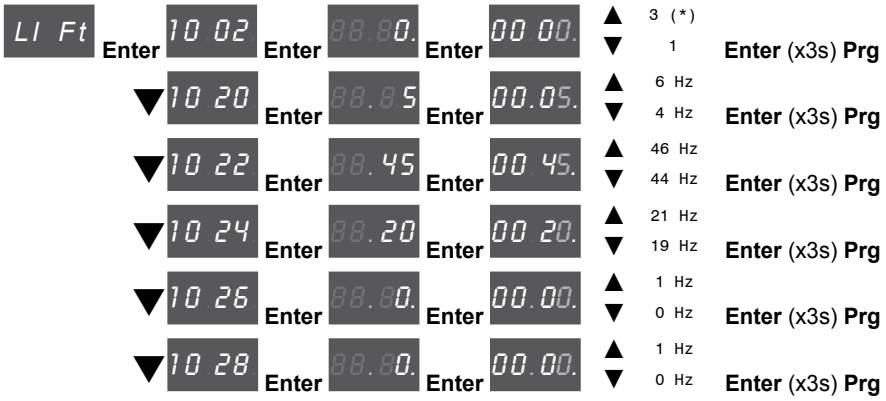

(*) 0=Hz, 1=m/s, 2=Rpm, 3=USCS (US units: fpm, ft/s2, ft/s³).

Attention

Multi speed configuration table, see page 92.

- **Set the ramp values**

- **Set the distance value**

- **Enable the inertia and gains of the speed loop calculation**

Next proceed to step 9 to save the system parameters that have been entered and those calculated by the drive using the autotune and automatic phasing procedures.

Step 9 - Save parameters

To save the new parameter settings, so that they are maintained also after power-off, proceed as follows:

SA vE **Enter** 5 5 0 **Enter** E nt **Enter** do nE
(1) (2) (3) (4)

(1) Press the **Enter** key to start the save parameters procedure.
(2) Press **Enter to confirm**
(3) End of procedure
(4) When the parameters have been saved correctly the drive displays this screen to show that the startup wizard is complete.

Press the **Prg** (x3s) key.

Final check

Note! If you wish to use the inertia value calculated by the converter, you should copy the parameter value 5.4.20 CalcInertia (PAR 12020, Menu LIFT/ MECHANICAL INFORMATION) in parameter 16.20 Inertia, PAR: 2240.

Menu 5.4 MECHANICAL DATA, parameter 5.4.20 **CalcInertia**, PAR: 12020, default=(S).

05. **Enter** ▼ **(x 4)** 05.04 **Enter** ▼ **(x 8)** 20 20 **Enter** 1. ▼ 10 (=1.10 kgm²)

Menu 16 SPEED REG GAINS, parameter 16.20 **Inertia**, PAR: 2240, default=(S).

16. **Enter** ▲ **(x 2))** 22 40 **Enter** 4. **Enter** 4. ▼ **(x 3)** 1. **Enter (x 3s)** 1.
▼ **Enter** 16 **Enter** 16 **Enter** ▼ **(x 6)** 10 **Enter (x 3s)** (=1.10 kgm²)

Check the regulation mode setting before starting the motor and change it if necessary.

Available selections:
0 SSC control
1 Flux vector OL
2 Flux vector CL

Menu 04 DRIVE CONFIG, parameter 04.2 **Regulation mode**, PAR: 552, default=SSC control.

04. **Enter** ▼ 5 52 **Enter** 2

9.1 Asynchronous motor startup wizard (with the optional keypad)

The ADL300 can operate with regulation modes: Voltage/Frequency (SSC) , Sensorless (open loop) and field-oriented vector control (closed loop).

Note!

Before starting, check the factory settings:

Menu 02 DRIVE INFO, parameter 02.2 **Control type**, PAR: 480, default=11.

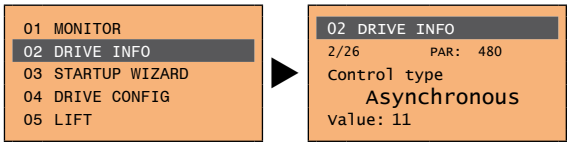

Menu 04 DRIVE CONFIG, parameter 04.2 **Regulation mode**, PAR: 552, default=SSC control.

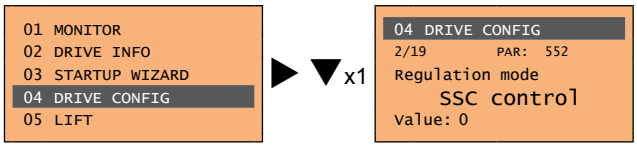

The STARTUP WIZARD is a guided procedure used for quick start-up of the drive that helps to set the main parameters.
It consists of a series of questions, relating to the various sequences for entering and calculating the parameters necessary for correct drive and lift application operation. The order of these sequences is as follows:

- **Electrical connections** **See step 1**
- **Setting motor parameters** **See step 2**
- **Autotune with motor at stand-still or coupled to the load** **See step 3**
- **Setting encoder parameters** (with control mode=Flux vector CL) **See step 4**
- **Setting the maximum speed reference and maximum system speed** **See step 6**
- **Setting system weights** **See step 7**
- **Setting application parameters** **See step 8**
- **Saving parameters** **See step 9**

The format of the function selection page is as follows:

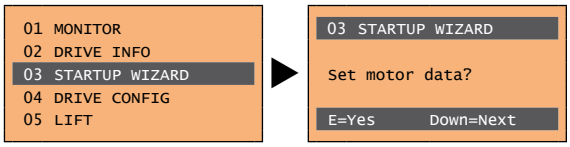

Pressing the **E** key, the function to be programmed is accessed.
Press the ▼ (Down) key to move to the next function skipping the current function.
Press the ▲ (Up) key to return to the previous function.
To terminate the sequence of functions and return to the menu, press the **ESC** key.

The end of the start-up sequence is indicated with the page:

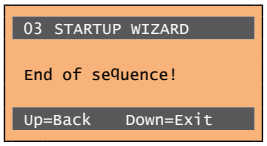

Press the ▼(Down) key to exit the sequence and return to the menu.

Step 1 - Electrical connections

Make the connections as described in paragraph 7.3.2.

Checks to be performed before powering the drive

- Check that the supply voltage is correct and that the input terminals on the drive (L1, L2 and L3) are connected correctly.
- Check that the output terminals on the drive (U, V and W) are connected to the motor correctly.
- Check that all the drive control circuit terminals are connected correctly. Check that all control inputs are open.

Powering the drive

- After completing all the checks described above, power the drive and proceed to step 2.

Step 2 - Setting motor parameters

Note! **Def:** The factory (default) setting depends on the size of the drive that is connected. These values refer to the ADL..-1055-AC

Set the plate data of the motor connected, according to the procedures described on the previous pages.

Rated voltage [V]: the rated voltage of the motor indicated on the data plate.

Rated current [A]: motor rated current; approximately, the value should not be less than 0.3 times the rated current of the drive, output current class 1 @ 400 V on the data plate of the drive.

Rated speed [rpm]: rated speed of the motor; this value must reflect the speed of the fully loaded motor at rated frequency. If slip is indicated on the motor data plate, set the Rated speed parameter as follows: Rated speed = Synchronous speed - Slip (e.g. for a 4-pole motor Rated speed = 1500 - 70 = 1430).

Rated frequency [Hz]: rated frequency of the motor, as shown on the data plate (asynchronous motors only).

Pole pairs: Number of motor pole pairs. The number of motor pole pairs is calculated using the plate data and the following formula:
P = 60 [s] x f [Hz] / nN [rpm]

Where: P = motor pole pairs, f = motor rated frequency (e.g. 50); nN = motor rated speed (e.g. 1450)

Rated power [kW]: Motor rated power; for a motor data plate with an HP power value, set the rated power kW = 0.736 x the motor power HP value.

Rated power factor: Leave the default rated power factor if the data are not available on the data plate.

Note!

When data entry is complete the **Take parameters** command is executed automatically (menu 14 MOTOR DATA, PAR: 2020). The motor data entered during the STARTUP WIZARD procedure are saved in a RAM memory to enable the drive to perform the necessary calculations.

These data are lost if the device is switched off. To save the motor data follow the procedure described in step 9.

At the end of the procedure proceed to step 3

Step 3 - Autotune with motor at stand-still or coupled to the load

The drive carries out the motor autotune procedure (real measurement of motor parameters).
There are two self-tuning modes: **Reduced** (default) and **Extended**, which can be selected using parameter 2026 **Autotune mode**. The reduced procedure is fast and recommended in most cases. The extended procedure can be used to achieve maximum efficiency, but may take several minutes.

Note!

If this operation generates an error message (e.g. Error code 1), check the connections of the power and control circuits (see **step 1** - Connections), check the motor data settings (see **step 2** - Setting motor parameters) and then repeat the guided Autotune procedure.

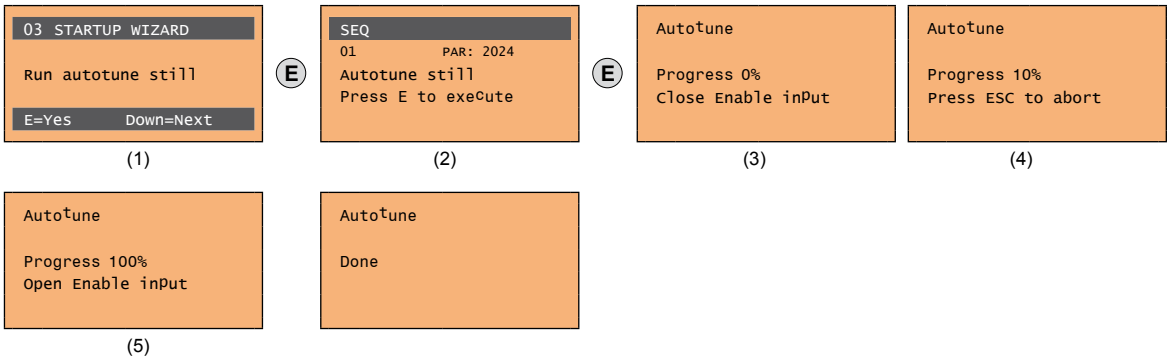

(1) Press the **E** key to proceed to the autotune procedure.

(2) Press the **E** key to start the autotune procedure.

(3) Enable the drive by connecting terminal 9 on the I/O card (Enable) to terminal 12 (+24 V). To abort this operation, press the **ESC** key.

(4) Once the drive is enabled the autotune procedure starts. This may take a few minutes, depending on the type of motor being used.

(5) At the end of the procedure the following screen is displayed. After opening the Enable contact, go to step 4 (if using a feedback card) or 5 to proceed with the wizard.

Note!

At the end of the autotune procedure there is a request to open the Enable contact (terminals 9 - 12); this results in the automatic execution of the **Take tune parameters** command (menu 14 MOTOR DATA, PAR: 2078).

The calculated parameters are saved in a RAM memory to enable the drive to perform the necessary calculations. These data are lost if the device is switched off. To save the motor data follow the procedure described in step 6.

Step 4 - Setting encoder parameters (only if a feedback card is installed)

Caution

The incorrect configuration of the encoder tension can permanently damage the device; therefore, it is advisable to check the values on the encoder's specification plate.

If the drive is to be used in closed loop mode, a check must be run to make sure that an encoder feedback card is installed (standard EXP-DE-I1R1F2-ADL); make the connections as described in paragraph 7.2.3 and set the following parameters for the encoder installed on the motor:

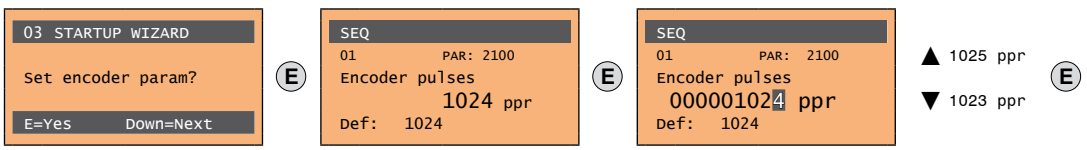

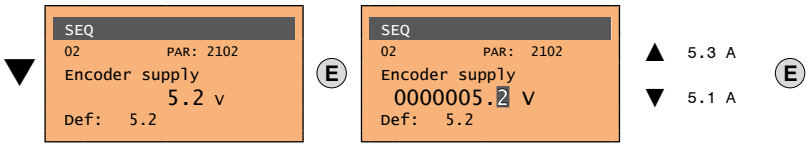

Step 5 – Encoder phasing

Not available in this mode.

Step 6 - Setting the maximum speed reference value and system speed

Setting the maximum speed reference value: this defines the maximum motor speed value (in rpm) that can be reached with each single reference signal (analog or digital).

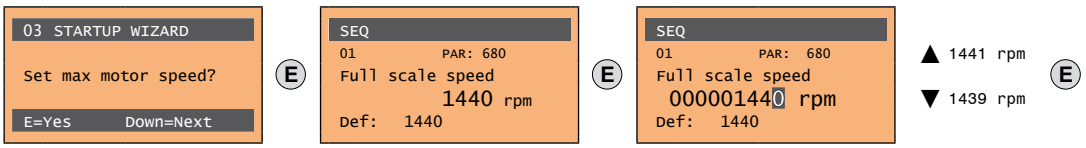

Set the maximum system speed in m/s

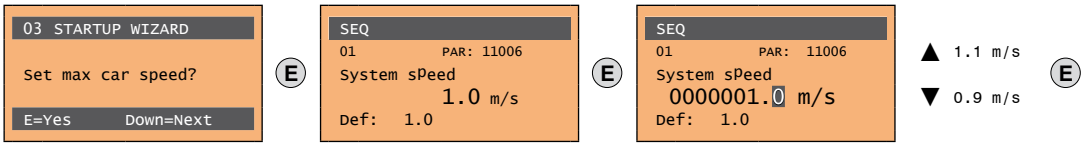

After setting the speed, proceed to step 7 to set the system weights.

Note!

The factory (default) setting depends on the size of the drive that is connected. These values refer to the ADL..-1055-AC

Step 7 - Setting the system weights

The system weights must be entered in this part of the wizard procedure.

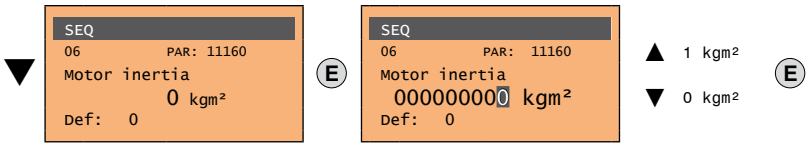

After setting the mechanical measurements, proceed to the next step.

Step 8 - Setting application parameters

The application data can be entered at this stage.

- **Set the multispeed values**

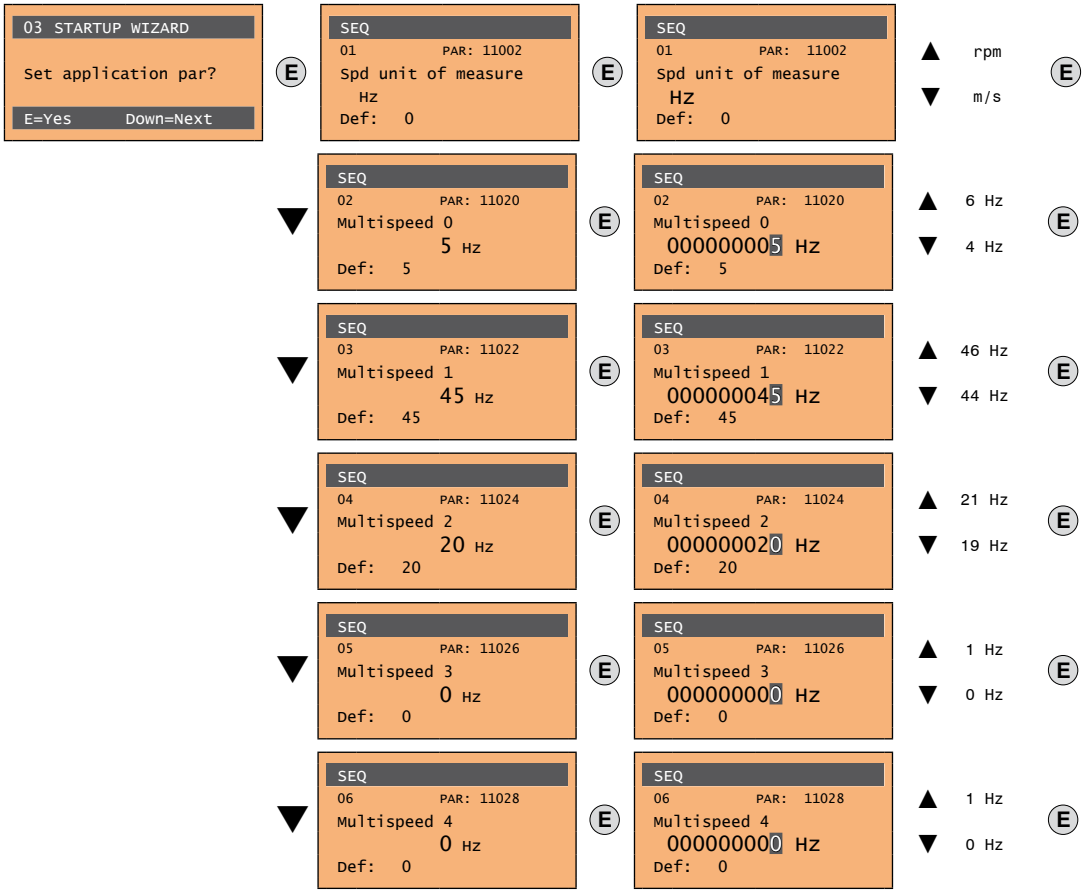

Multi speed configuration table:

Attention

Through the combination of "MtlSpd S0" (Digital input 4), "MtlSpd S1" (Digital input 5) and "MtlSpd S2" (Digital input 6) commands, is possible to select Multi speed desired, according to next table:

MtlSpd S2	MtlSpd S1	MtlSpd S0	ACTIVE SPEED
0	0	0	Multispeed 0, PAR 11020
0	0	1	Multispeed 1, PAR 11022
0	1	0	Multispeed 2, PAR 11024
0	1	1	Multispeed 3, PAR 11026
1	0	0	Multispeed 4, PAR 11028
1	0	1	Multispeed 5, PAR 11030
1	1	0	Multispeed 6, PAR 11032
1	1	1	Multispeed 7, PAR 11034

- **Set the ramp values**

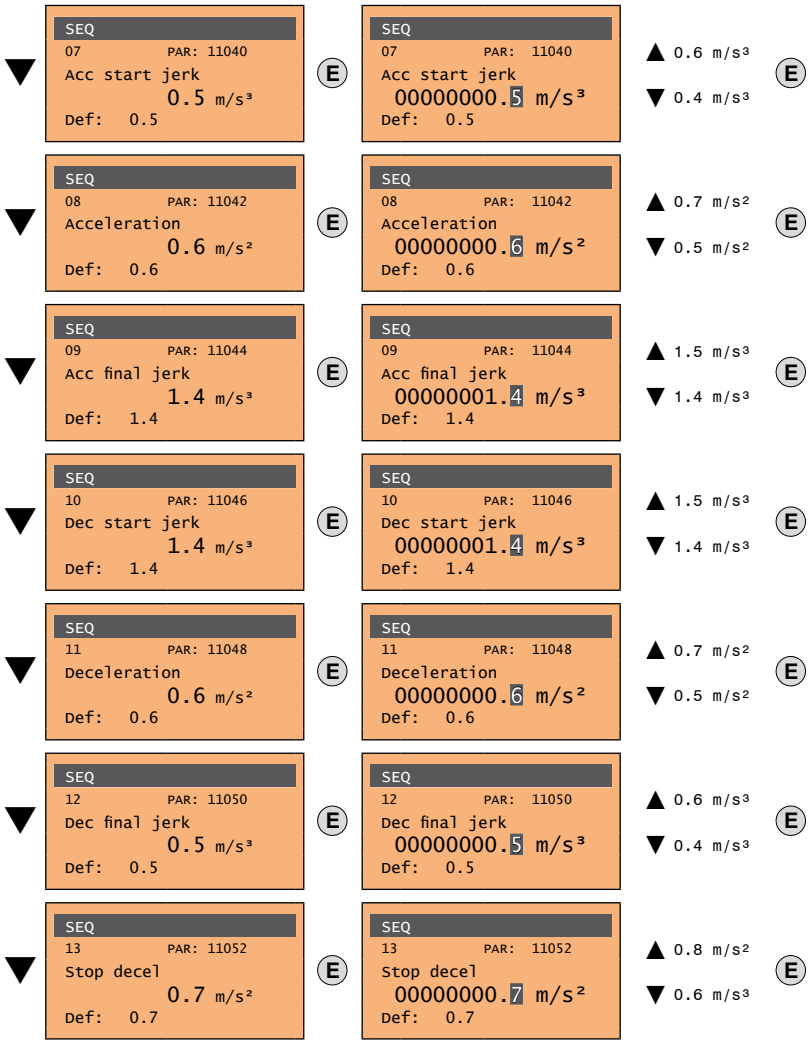

- **Set the distance values**

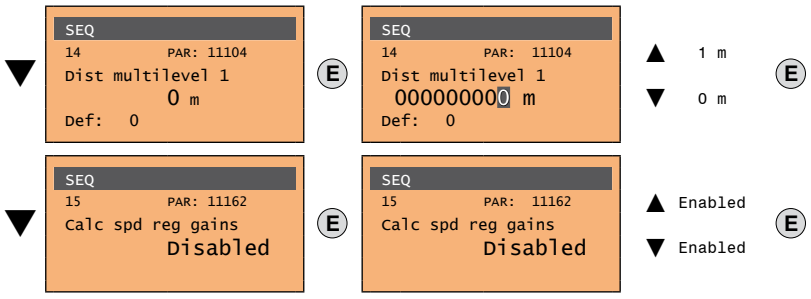

Next proceed to step 9 to save the system parameters that have been entered and those calculated by the drive using the autotune and automatic phasing procedures.

Step 9 - Save parameters

To save the new parameter settings, so that they are maintained also after power-off, proceed as follows:

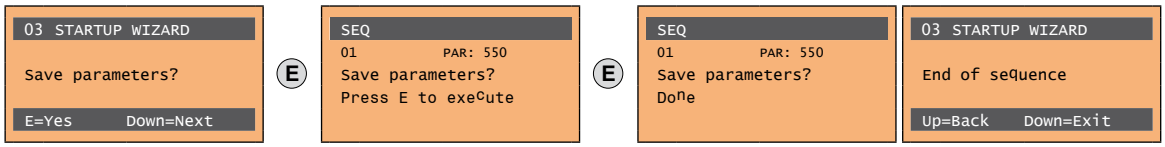

(1) (2) (3) (4)

(1) Press the **E** key to start the save parameters procedure.
(2) Press **E to confirm**
(3) End of procedure
(4) When the parameters have been saved correctly the drive displays this screen to show that the startup wizard is complete.

Final check

Note!

If you wish to use the inertia value calculated by the converter, you should copy the parameter value 5.4.20 CalcInertia (PAR 12020, Menu LIFT/ MECHANICAL INFORMATION) in parameter 16.20 Inertia, PAR: 2240.

Menu 5.4 MECHANICAL DATA, parameter 5.4.20 **CalcInertia**, PAR: 12020, default=(S).

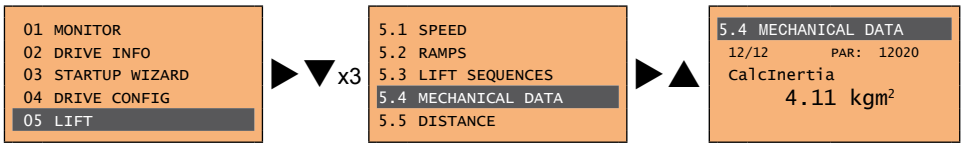

Menu 16 SPEED REG GAINS, parameter 16.20 **Inertia**, PAR: 2240, default=(S).

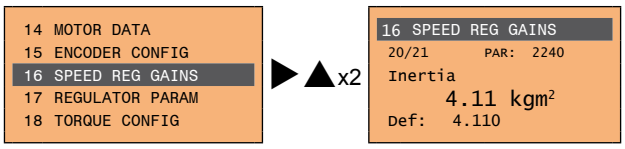

Check the regulation mode setting before starting the motor and change it if necessary.

Available selections:
0 SSC control
1 Flux vector OL
2 Flux vector CL

Menu 04 DRIVE CONFIG, parameter 04.2 **Regulation mode**, PAR: 552, default=SSC control.

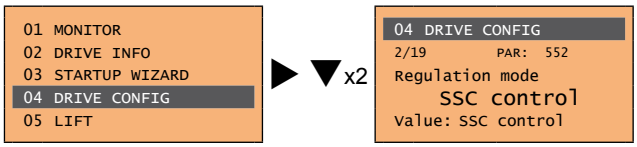

9.2 Startup wizard for brushless motors (with the integrated keypad)

The ADL300 can operate with regulation modes: field-oriented vector control of permanent magnet synchronous motors (brushless).

Note!

Before starting, check the factory setting:

Menu 02 DRIVE INFO, parameter 02.2 **Control type**, PAR: 480, default=12.

Menu 04 DRIVE CONFIG, parameter 04.2 **Regulation mode**, PAR: 552, default=Flux vector CL.

The STARTUP WIZARD is a guided procedure used for quick start-up of the drive that helps to set the main parameters.
It consists of a series of questions, relating to the various sequences for entering and calculating the parameters necessary for correct drive and lift application operation. The order of these sequences is as follows:

• **Electrical connections**	**See step 1**
• **Setting motor parameters**	**See step 2**
• **Autotune with motor at stand-still or coupled to the load**	**See step 3**
• **Setting encoder parameters**	**See step 4**
• **Encoder phasing**	**See step 5**
• **Setting the maximum speed reference and maximum system speed**	**See step 6**
• **Setting system weights**	**See step 7**
• **Setting application parameters**	**See step 8**
• **Saving parameters**	**See step 9**

The format of the function selection page is as follows:

Pressing the **Enter** key, the function to be programmed is accessed.
Press the ▼ (Down) key to move to the next function skipping the current function.
Press the ▲ (Up) key to return to the previous function.
To terminate the sequence of functions and return to the menu, press the **Prg** key.

The end of the start-up sequence is indicated with:

Press the **Prg** key to exit the sequence and return to the menu.

Step 1 - Electrical connections

Make the connections as described in paragraph 7.3.2.

Checks to be performed before powering the drive

- Check that the supply voltage is correct and that the input terminals on the drive (L1, L2 and L3) are connected correctly.
- Check that the output terminals on the drive (U, V and W) are connected to the motor correctly.
- Check that all the drive control circuit terminals are connected correctly. Check that all control inputs are open.
- Check the encoder connections, see section A.3 of the Appendix.

Powering the drive

- After completing all the checks described above, power the drive and proceed to step 2.

Step 2 - Setting motor parameters

Note! **Def:** The factory (default) setting depends on the size of the drive that is connected. These values refer to the ADL..-1055-BR

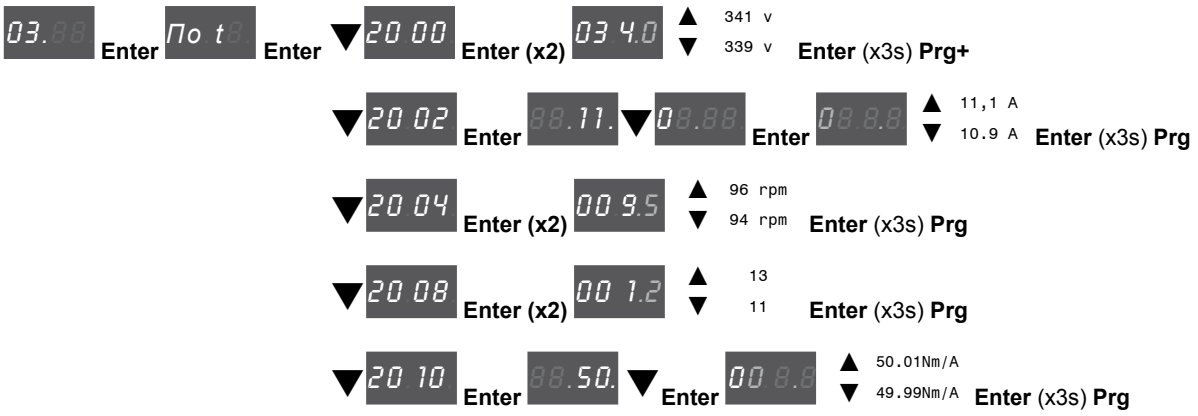

Set the plate data of the motor connected, following the instructions.

Rated voltage [V]:	the rated voltage of the motor indicated on the data plate.
Rated current [A]:	motor rated current; approximately, the value should not be less than 0.3 times the rated current of the drive, output current class 1 @ 400 V on the data plate of the drive.
Rated speed [rpm]:	motor rated speed; see data plate.
Pole pairs:	Number of motor pole pairs; see data plate.
Torque constant (KT):	(KT) Ratio between the torque generated by the motor and the current required to supply it.

Note! When data entry is complete the **Take parameters** command is executed automatically (menu 14 MOTOR DATA, PAR: 2020). The motor data entered during the STARTUP WIZARD procedure are saved in a RAM memory to enable the drive to perform the necessary calculations.

These data are lost if the device is switched off. To save the motor data follow the procedure described in step 9.

At the end of the procedure proceed to step 3. Press the **Prg** and ▼ keys.

Step 3 - Autotune with motor at stand-still or coupled to the load

The drive carries out the motor autotune procedure (real measurement of motor parameters).
Autotuning may take a few minutes.

Note! If this operation generates an error message (e.g. Error code 1), check the connections of the power and control circuits (see **step 1** - Connections), check the motor data settings (see **step 2** - Setting motor parameters) and then repeat the guided Autotune procedure.

(1) (2) (3) (4) (5)

(1) Press the **Enter** key to proceed to the autotune procedure.

(2) Press the **Enter** key to start the autotune procedure.

(3) Enable the drive by connecting terminal 9 on the I/O card (Enable) to terminal 12 (+24 V). To abort this operation, press the **Prg** key.

(4) Once the drive is enabled the autotune procedure starts. This may take a few minutes, depending on the type of motor being used.

(5) At the end of the procedure the following screen is displayed. After opening the Enable contact, proceed to step 4. Press the **Prg** x2 and ▼ keys.

Note! At the end of the autotune procedure there is a request to open the Enable contact (terminals 9 - 12); this results in the automatic execution of the **Take tune parameters** command (menu 14 MOTOR DATA, PAR: 2078).

The calculated parameters are saved in a RAM memory to enable the drive to perform the necessary calculations. These data are lost if the device is switched off. To save the motor data follow the procedure described in step 9.

Step 4 - Setting encoder parameters (Standard card EXP-SESC-I1R1F2-ADL)

Caution

The incorrect configuration of the encoder tension can permanently damage the device; therefore, it is advisable to check the values on the encoder's specification plate.

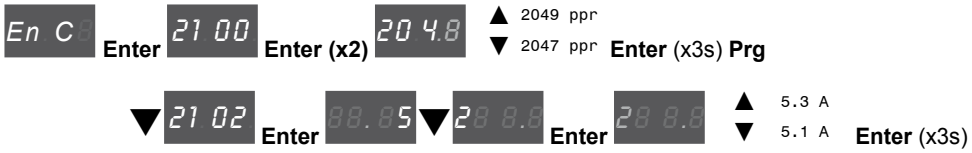

At the end of the procedure proceed to step 6. Press the **Prg** x2 and ▼ keys.

Step 5 - Setting encoder parameters (Standard card EXP-SESC-I1R1F2-ADL)

ADL300 drives have a command to start automatic phasing of the absolute encoder (**the brake must be blocked**).

Phasing must be repeated whenever:

- the drive is replaced (alternatively, download parameters taken from previous drive)
- the motor is replaced
- the encoder is replaced

Note !

For more information see parameters 15.15 PAR 2190 **Autophase rotation** and 15.16 PAR 2192 **Autophase still** on "Functions description and parameters list" manual (ADL300 Vector inverter for lifts with **synchronous motors**).

See section A.3.2 Phasing in the Appendix for further information.

(1) Press the **Enter** key to proceed to the autotune procedure.

(2) Press the **Enter** key to start the autotune procedure.

(3) Enable the drive by connecting terminal 9 on the I/O card (Enable) to terminal 12 (+24 V). To abort this operation, press the **Prg** key.

(4) Once the drive is enabled the autotune procedure starts. This may take a few minutes, depending on the type of motor being used.

(5) At the end of the procedure the following screen is displayed. After opening the Enable contact, proceed to step 6. Press the **Prg** x2 and ▼ keys.

Step 6 - Setting the maximum speed reference value and system speed

Setting the maximum speed reference value: this defines the maximum motor speed value (in rpm) that can be reached with each single reference signal (analog or digital).

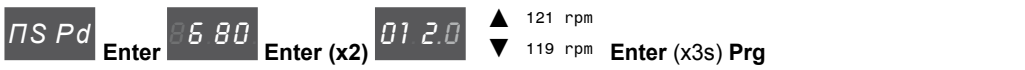

Set the maximum system speed in m/s

After setting the speed, proceed to step 7 to set the system weights. Press the **Prg** x3 and ▼ keys.

Note!

The factory (default) setting depends on the size of the drive that is connected. These values refer to the ADL..-1055-BR

Step 7 - Setting the system weights

The system weights must be entered in this part of the wizard procedure.

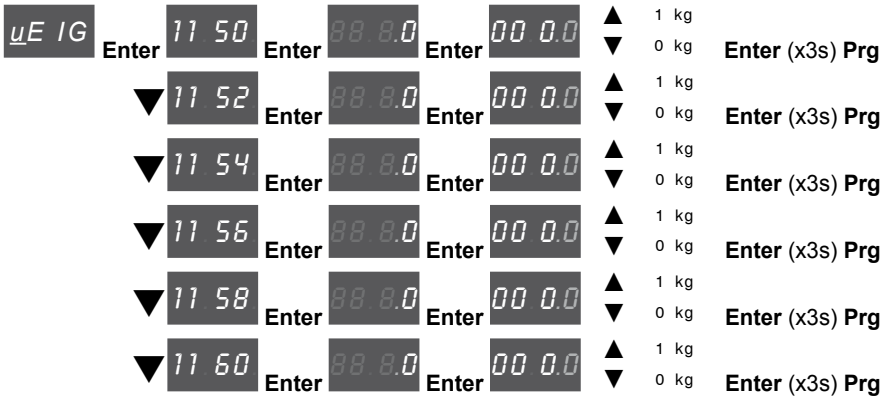

After setting the mechanical measurements, proceed to the next step. Press the **Prg** x2 and ▼ keys.

Step 8 - Setting application parameters

The application data can be entered at this stage.

- **Set the multispeed values**

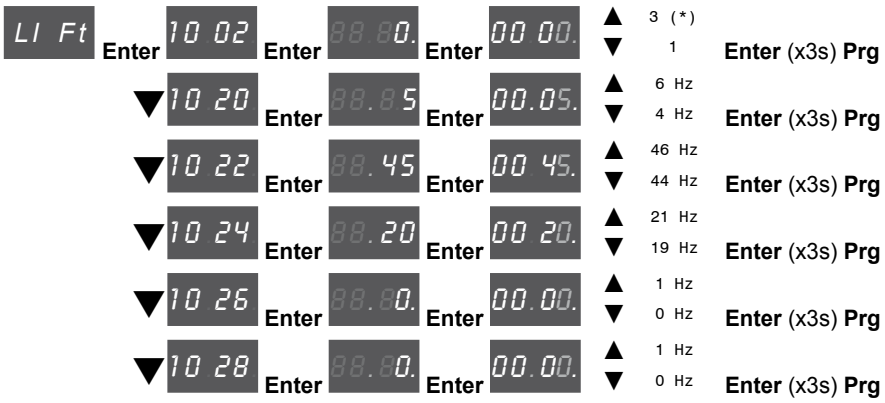

(*) 0=Hz, 1=m/s, 2=Rpm, 3=USCS (US units: fpm, ft/s2, ft/s³).

Attention

Multi speed configuration table, see page 92.

- **Set the ramp values**

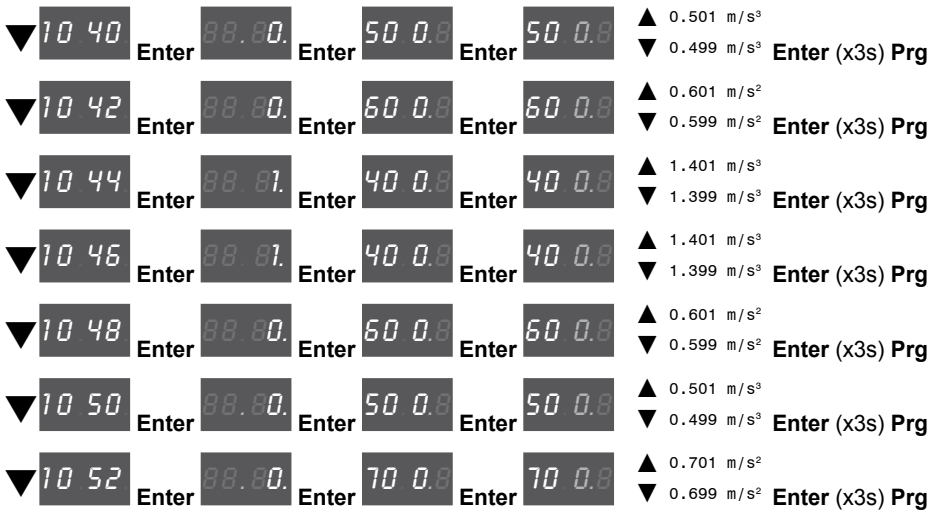

- **Set the distance value**

- **Enable the inertia and gains of the speed loop calculation**

Next proceed to step 9 to save the system parameters that have been entered and those calculated by the drive using the autotune and automatic phasing procedures.

Press the **Prg** x3 and ▼ keys.

Step 9 - Save parameters

To save the new parameter settings, so that they are maintained also after power-off, proceed as follows:

(1) (2) (3) (4)

(1) Press the **Enter** key to start the save parameters procedure.

(2) Press **Enter** to confirm

(3) End of procedure

(4) When the parameters have been saved correctly the drive displays this screen to show that the startup wizard is complete.

Press the **Prg** (x3s) key.

Final check

Note!

If you wish to use the inertia value calculated by the converter, you should copy the parameter value 5.4.20 CalcInertia (PAR 12020, Menu LIFT/ MECHANICAL INFORMATION) in parameter 16.20 Inertia, PAR: 2240.

Menu 5.4 MECHANICAL DATA, parameter 5.4.20 **CalcInertia**, PAR: 12020, default=(S).

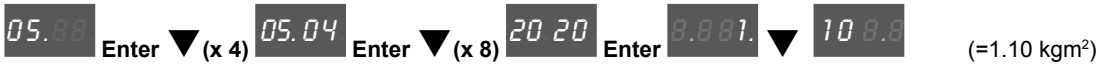

(=1.10 kgm²)

Menu 16 SPEED REG GAINS, parameter 16.20 **Inertia**, PAR: 2240, default=(S).

(=1.10 kgm²)

Check parameter settings before starting the motor and change if necessary.

Menu 21 ALARM CONFIG, parameter 21.12 Overspeed threshold, PAR: 4540.

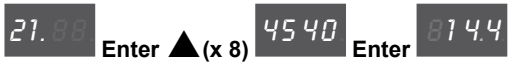

(default= 144 rpm)

9.2 Startup wizard for brushless motors (with the optional keypad)

The ADL300 can operate with regulation modes: field-oriented vector control of permanent magnet synchronous motors (brushless).

Note!

Before starting, check the factory setting:

Menu 02 DRIVE INFO, parameter 02.2 **Control type**, PAR: 480, default=12.

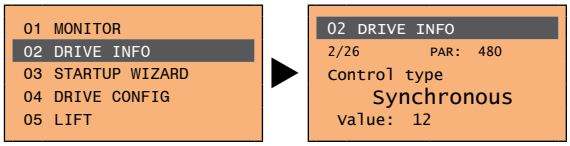

Menu 04 DRIVE CONFIG, parameter 04.2 **Regulation mode**, PAR: 552, default=Flux vector CL.

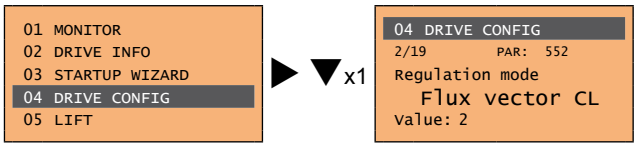

The STARTUP WIZARD is a guided procedure used for quick start-up of the drive that helps to set the main parameters.
It consists of a series of questions, relating to the various sequences for entering and calculating the parameters necessary for correct drive and lift application operation. The order of these sequences is as follows:

- **Electrical connections** **See step 1**
- **Setting motor parameters** **See step 2**
- **Autotune with motor at stand-still or coupled to the load** **See step 3**
- **Setting encoder parameters** **See step 4**
- **Encoder phasing** **See step 5**
- **Setting the maximum speed reference and maximum system speed** **See step 6**
- **Setting system weights** **See step 7**
- **Setting application parameters** **See step 8**
- **Saving parameters** **See step 9**

The format of the function selection page is as follows:

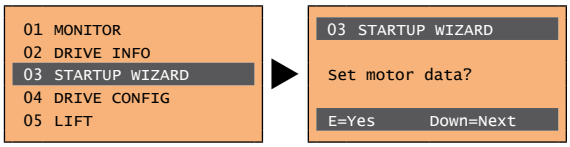

Pressing the **E** key, the function to be programmed is accessed.
Press the ▼ (Down) key to move to the next function skipping the current function.
Press the ▲ (Up) key to return to the previous function.
To terminate the sequence of functions and return to the menu, press the **ESC** key.

The end of the start-up sequence is indicated with the page:

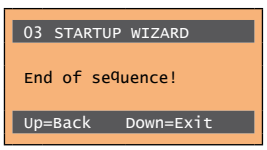

Press the ▼(Down) key to exit the sequence and return to the menu.

Step 1 - Electrical connections

Make the connections as described in paragraph 7.3.2.

Checks to be performed before powering the drive

- Check that the supply voltage is correct and that the input terminals on the drive (L1, L2 and L3) are connected correctly.
- Check that the output terminals on the drive (U, V and W) are connected to the motor correctly.
- Check that all the drive control circuit terminals are connected correctly. Check that all control inputs are open.
- Check the encoder connections, see section A.3 of the Appendix.

Powering the drive

- After completing all the checks described above, power the drive and proceed to step 2.

Step 2 - Setting motor parameters

Note! **Def:** The factory (default) setting depends on the size of the drive that is connected. These values refer to the ADL..-1055-BR

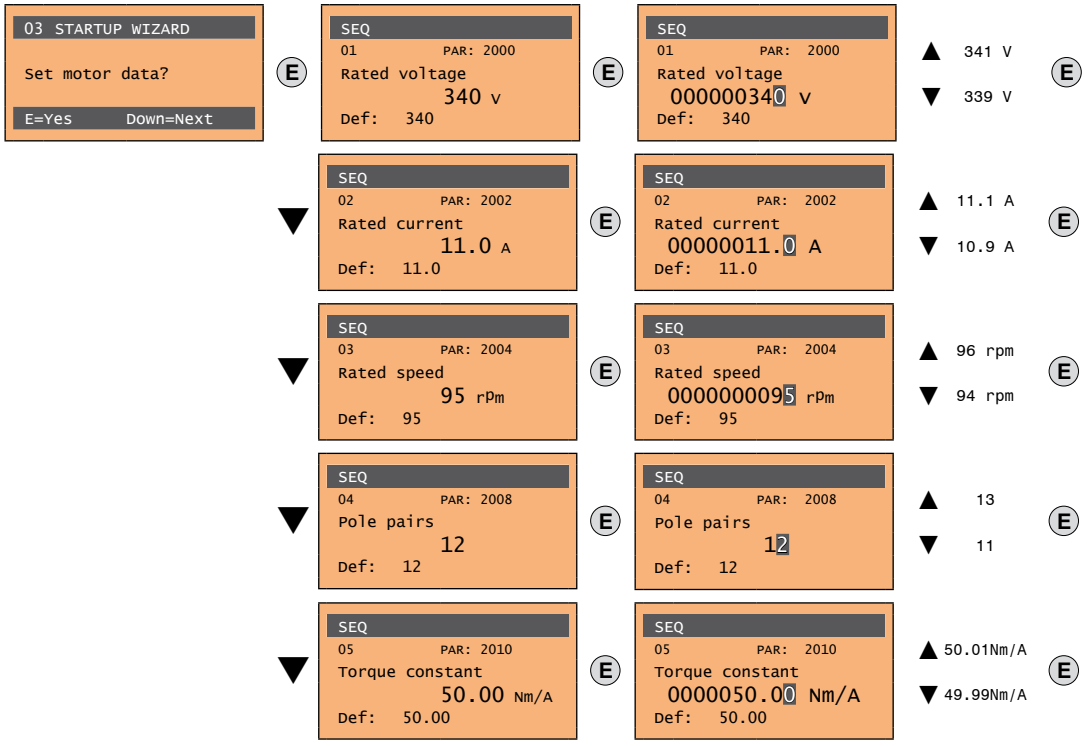

Set the plate data of the motor connected, following the instructions given on the previous pages.

Rated voltage [V]:	the rated voltage of the motor indicated on the data plate.
Rated current [A]:	motor rated current; approximately, the value should not be less than 0.3 times the rated current of the drive, output current class 1 @ 400 V on the data plate of the drive.
Rated speed [rpm]:	motor rated speed; see data plate.
Pole pairs:	Number of motor pole pairs; see data plate.
Torque constant (KT):	(KT) Ratio between the torque generated by the motor and the current required to supply it.

Note! When data entry is complete the **Take parameters** command is executed automatically (menu 14 MOTOR DATA, PAR: 2020). The motor data entered during the STARTUP WIZARD procedure are saved in a RAM memory to enable the drive to perform the necessary calculations.

These data are lost if the device is switched off. To save the motor data follow the procedure described in step 9.

At the end of the procedure proceed to step 3

Step 3 - Autotune with motor at stand-still or coupled to the load

The drive carries out the motor autotune procedure (real measurement of motor parameters).
Autotuning may take a few minutes.

Note!

If this operation generates an error message (e.g. Error code 1), check the connections of the power and control circuits (see **step 1** - Connections), check the motor data settings (see **step 2** - Setting motor parameters) and then repeat the guided Autotune procedure.

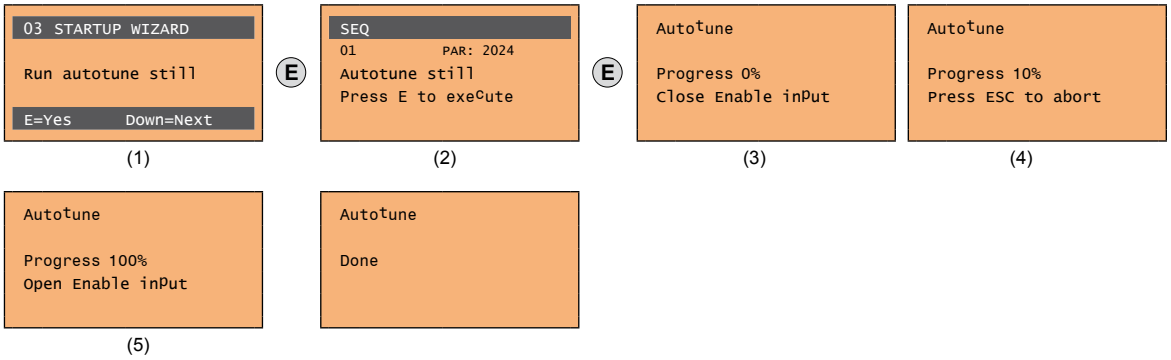

(1) Press the **E** key to proceed to the autotune procedure.

(2) Press the **E** key to start the autotune procedure.

(3) Enable the drive by connecting terminal 9 on the I/O card (Enable) to terminal 12 (+24 V). To abort this operation, press the **ESC** key.

(4) Once the drive is enabled the autotune procedure starts. This may take a few minutes, depending on the type of motor being used.

(5) At the end of the procedure the following screen is displayed. After opening the Enable contact, proceed to step 4.

Note!

At the end of the autotune procedure there is a request to open the Enable contact (terminals 9 - 12); this results in the automatic execution of the **Take tune parameters** command (menu 14 MOTOR DATA, PAR: 2078).

The calculated parameters are saved in a RAM memory to enable the drive to perform the necessary calculations. These data are lost if the device is switched off. To save the motor data follow the procedure described in step 9.

Step 4 - Setting encoder parameters (Standard card EXP-SESC-I1R1F2-ADL)

Caution

The incorrect configuration of the encoder tension can permanently damage the device; therefore, it is advisable to check the values on the encoder's specification plate.

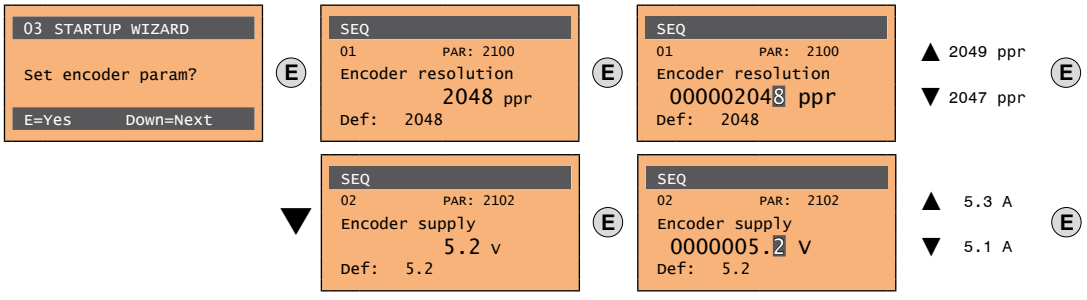

Step 5 - Setting encoder parameters (Standard card EXP-SESC-I1R1F2-ADL)

ADL300 drives have a command to start automatic phasing of the absolute encoder (**the brake must be blocked**).

Phasing must be repeated whenever:

- the drive is replaced (alternatively, download parameters taken from previous drive)
- the motor is replaced
- the encoder is replaced

Note !

For more information see parameters 15.15 PAR 2190 **Autophase rotation** and 15.16 PAR 2192 **Autophase still** on "Functions description and parameters list" manual (ADL300 Vector inverter for lifts with **synchronous motors**).

See section A.3.2 Phasing in the Appendix for further information.

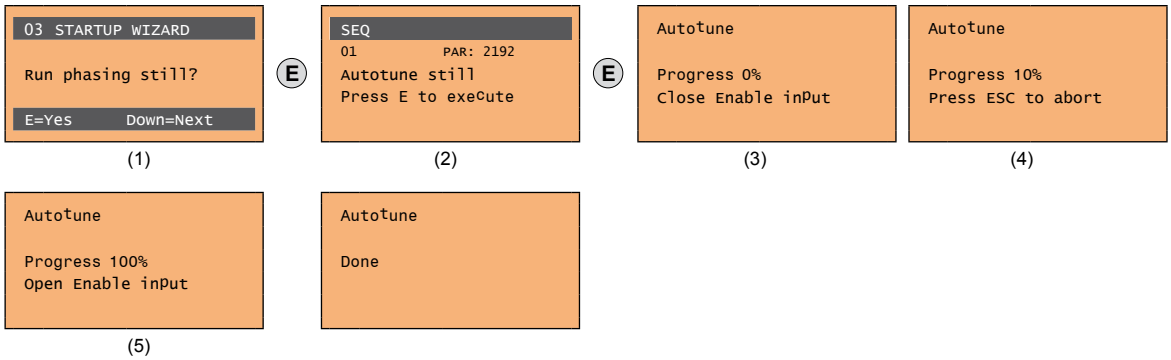

(1) Press the **E** key to proceed to the autotune procedure.

(2) Press the **E** key to start the autotune procedure.

(3) Enable the drive by connecting terminal 9 on the I/O card (Enable) to terminal 12 (+24 V). To abort this operation, press the **ESC** key.

(4) Once the drive is enabled the autotune procedure starts. This may take a few minutes, depending on the type of motor being used.

(5) At the end of the procedure the following screen is displayed. After opening the Enable contact, proceed to step 6.

Step 6 - Setting the maximum speed reference value and system speed

Setting the maximum speed reference value: this defines the maximum motor speed value (in rpm) that can be reached with each single reference signal (analog or digital).

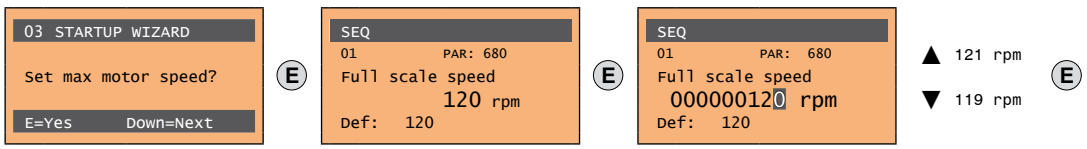

Set the maximum system speed in m/s

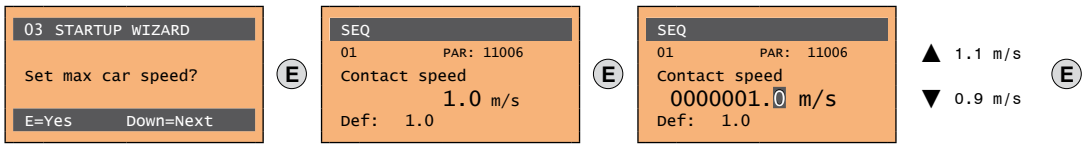

After setting the speed, proceed to step 7 to set the system weights.

Note! The factory (default) setting depends on the size of the drive that is connected. These values refer to the ADL..-1055-BR

Step 7 - Setting the system weights

The system weights must be entered in this part of the wizard procedure.

After setting the mechanical measurements, proceed to the next step.

Step 8 - Setting application parameters

The application data can be entered at this stage.

- **Set the multispeed values**

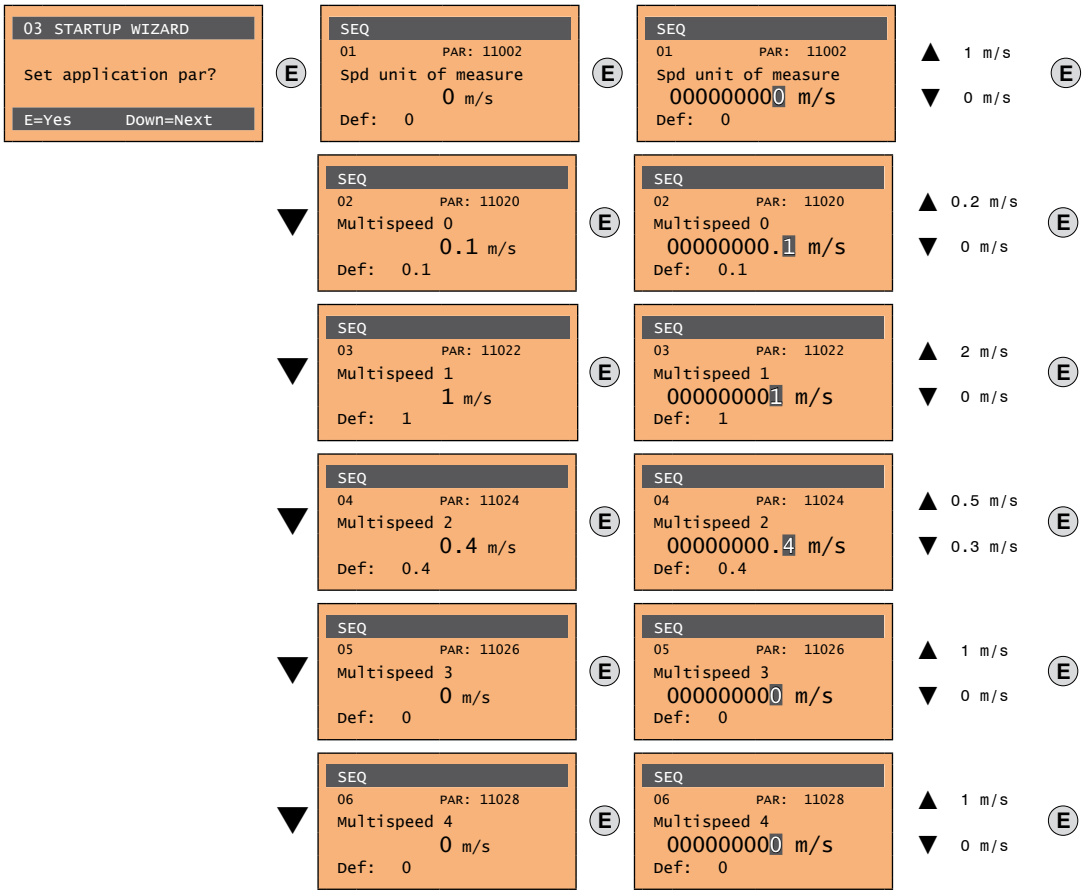

Attention

Multi speed configuration table, see page 92.

- **Set the ramp values**

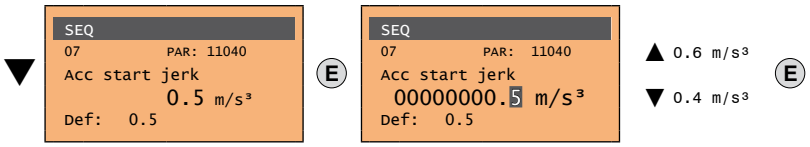

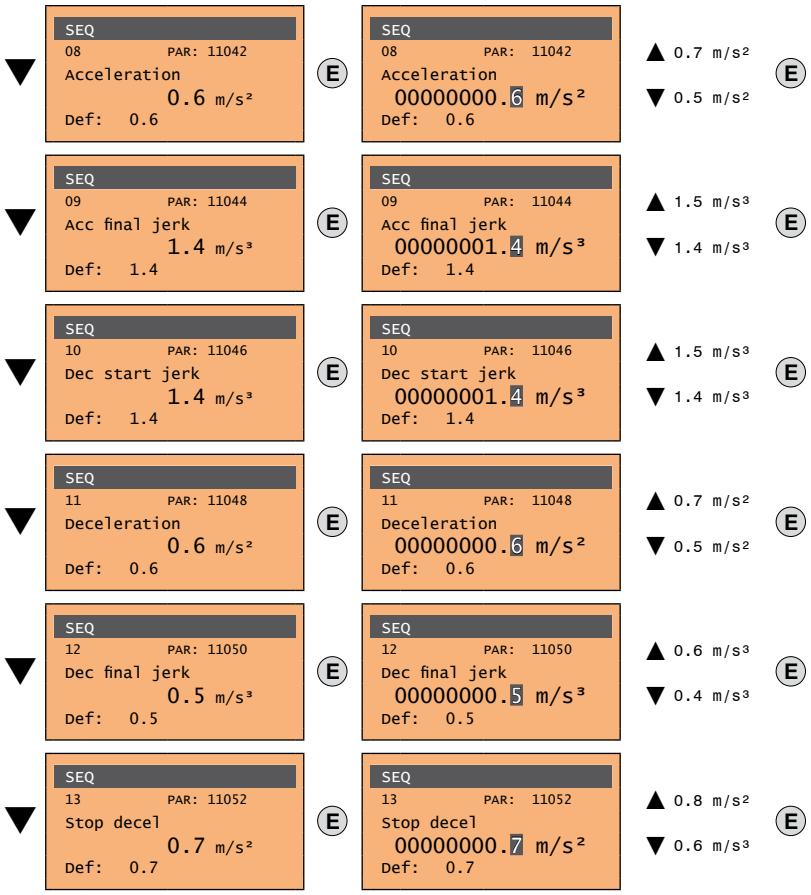

- **Set the distance values**

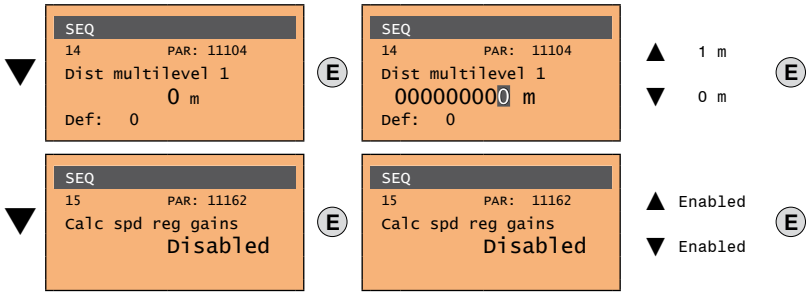

Next proceed to step 9 to save the system parameters that have been entered and those calculated by the drive using the autotune and automatic phasing procedures.

Step - Save parameters

To save the new parameter settings, so that they are maintained also after power-off, proceed as follows:

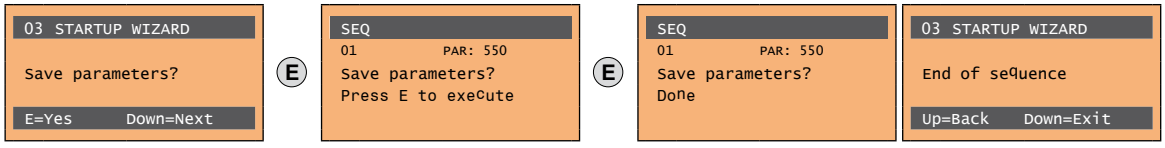

(1) (2) (3) (4)

(1) Press the **E** key to start the save parameters procedure.

(2) Press "E" to confirm

(3) End of procedure

(4) When the parameters have been saved correctly the drive displays this screen to show that the startup wizard is complete.

Final check

Note!

If you wish to use the inertia value calculated by the converter, you should copy the parameter value 5.4.20 CalcInertia (PAR 12020, Menu LIFT/ MECHANICAL INFORMATION) in parameter 16.20 Inertia, PAR: 2240.

Menu 5.4 MECHANICAL DATA, parameter 5.4.20 **CalcInertia**, PAR: 12020, default=(S).

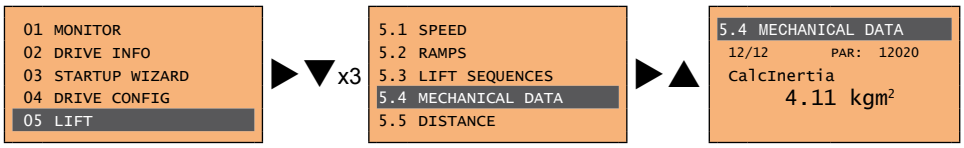

Menu 16 SPEED REG GAINS, parameter 16.20 **Inertia**, PAR: 2240, default=(S).

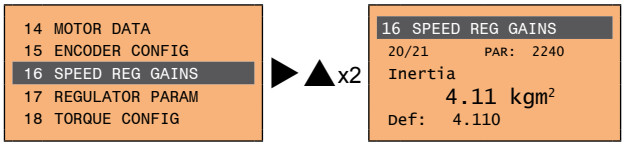

Check parameter settings before starting the motor and change if necessary.

Menu 21 ALARM CONFIG, parameter 21.12 Overspeed threshold, PAR: 4540.

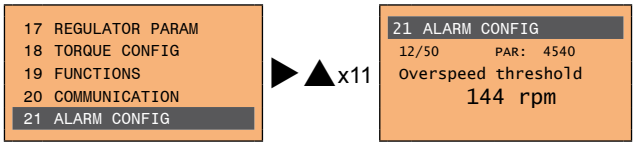

10 - Troubleshooting

10.1 Alarms

Note !

To reset alarms, see **paragraphs** **"8.2.6 Displaying and resetting Alarms" on page and "8.3.11 Alarms" on page .**

In the following table, the Code is visible only from serial line

Code	Error message shown on the display [on the integrated keypad]	Sub-code	Description
0	**No alarm**		**Condition:** No alarm present
1	**Overvoltage [OV]**		**Condition: DC link overvoltage alarm due to energy recovered from the motor.** The voltage arriving at the drive power section is too high compared to the maximum threshold relating to the PAR 560 **Mains voltage** parameter setting.
			Solution: - Extend the deceleration ramp. - Use a braking resistor to dissipate the energy recuperation, to be connected to the specific terminals. See section "7.1.9 Connection of braking resistor (optional)" on page .
2	**Undervoltage [UV]**		**Condition:** DC link undervoltage alarm. The voltage arriving at the drive power section is too low compared to the minimum threshold relating to the 560 Mains voltage parameter setting due to:. - the mains voltage being too low or overextended voltage drops. - poor cable connections (e.g. loose contactor terminals, inductance, filter, etc.).
			Solution: Check the connections and mains voltage
3	**Ground fault [GNDF]**		**Condition:** Ground short circuit alarm
			Solution: - Check drive and motor wiring. - Check that the motor is not grounded.
4	**Overcurrent [OC]**		**Condition: Instantaneous overcurrent protection intervention alarm.** This may be due to the incorrect setting of current regulator parameters or a short circuit between phases or ground fault on the drive output.
			Solution: - Check the current regulator parameters (menu 17) - Check wiring towards the motor
5	**Desaturation [DES]**		**Condition: Instantaneous overcurrent in the IGBT bridge alarm.**
			Solution: **-** Switch the drive off and then switch it on again. - Check the condition of the braking resistor isolation. Make sure there are no earth leakages. - If the alarm persists, contact the technical service centre.
6	**MultiUndervolt [MUV]**		**Condition:** The number of attempted automatic restarts after the **Undervoltage** alarm has exceeded the set **PAR 4650 UVRep attempts** value in the **PAR 4652 UVRep delay** time.
			Solution: Too many Undervoltage alarms. Adopt the proposed solutions for the Undervoltage alarm.
7	**MultiOvercurr [MOC]**		**Condition:** 2 attempted automatic restarts after the Overcurrent alarm within 30 seconds. If more than 30 seconds pass after the Overcurrent alarm was generated, the attempt counter is reset.
			Solution: Too many Overcurrent alarms. Adopt the proposed solutions for the Overcurrent alarm.
8	**MultiDesat [MDES]**		**Condition:** 2 attempted at automatic restarts after the Desaturation alarm within 30 seconds. If more than 30 seconds pass after the Desaturation alarm was generated, the attempt counter is reset.
			Solution: Too many **Desaturation** alarms. Adopt the proposed solutions for the **Desaturation** alarm.
9	**Heatsink OT [HOT]**		**Condition:** Heatsink temperature too high alarm
			Solution: - Verify the correct operation of the cooling fan. - Check that the heatsinks are not clogged - Check that the openings for the cabinet cooling air are not blocked.
10	**HeatsinkS OTUT [HSOT]**		**Condition:** IGBT module temperature too high or too low alarm
			Solution: - Verify the correct operation of the cooling fan. - Check that the heatsinks are not clogged - Check that the openings for the cabinet cooling air are not blocked.
11	**Intakeair OT [IOT]**		**Condition:** Input air temperature too high alarm.
			Solution: Check correct fan operation - Check that panel cooling air openings are unobstructed. - Check temperature in electrical panel.
12	**Motor OT [MOT]**		**Condition:** Motor overtemperature alarm. Possible causes: - Load cycle too heavy - The motor is installed in a place where the ambient temperature is too high - If the motor is provided with a blower: the fan is not working - If the motor is not provided with a blower: the load is too high at slow speeds. Cooling the fan on the motor shaft is not sufficient for this load cycle. - The motor is used at less than the rated frequency, causing additional magnetic losses.

Code	Error message shown on the display [on the integrated keypad]	Sub-code	Description
	nOt		**Solution:** - Change the processing cycle. - Use a cooling fan to cool the motor.
13	**Drive overload [DOL]** doL		**Condition:** Drive overload alarm. - The inverter output current has exceeded the allowed overload value. - The overload cycle has exceeded the allowed values.
			Solution: - Check that the load is not excessive. - Check that accelerations are not excessive. - Check that the overload cycle is within allowed limits.
14	**Motor overload [MOL]** MoL		**Condition:** Motor overload alarm. The current absorbed during operation is greater than that specified on the motor data plate.
			Solution: - Reduce the motor load. - Increase the size of the motor.
15	**Bres overload [BOL]** boL		**Condition:** Braking resistor overload alarm. The current absorbed by the resistor is greater than the rated current.
			Solution: - Check the size of the braking resistor. - Check the condition of the braking resistor.
16	**Phase loss [PHL]** PHL		**Condition:** Power phase loss alarm.
			Solution: Check the mains voltage and whether any protections upstream of the drive have been tripped.
17	**Opt Bus fault [OPTB]** oPtb		**Condition:** Error in the configuration stage or communication error.
		XXX0H-X	If the first digit to the left of "H" in the alarm sub-code is equal to 0, the error relates to a communication problem.
		XXXXH-X	If the first digit to the left of "H" in the alarm sub-code is other than 0, the error relates to a configuration problem.
			Solution: For configuration errors, check the configuration of the Bus communication, Bus type, Baudrate, address. parameter setting For communication errors verify wiring, resistance of terminations, interference immunity, timeout settings. For more details reference should be made to the datasheet of the bus being used.
18	**Opt 1 IO fault [OPT1]** oPt1		**Condition:** Error in the communication between Regulation and I/O expansion card in slot 1 (Advanced version only).
			Solution: Check that it has been inserted correctly, see **Appendix section A.1**. (Advanced version only).
19	**Opt 2 IO fault** oPt2		**Condition:** Error in the communication between Regulation and encoder expansion card in slot 2 (Advanced version only).
			Solution: Check that it has been inserted correctly, see **Appendix section A.1**. (Advanced version only).
20	**Opt Enc fault [OPTE]** oPtE		**Condition:** Error in the communication between Regulation and Encoder feedback card (Advanced version only).
			Solution: Check that it has been inserted correctly, see **Appendix section A.1**.
21	**External fault [EF]** EF		**Condition:** External alarm present. A digital input has been programmed as an external alarm, but the +24V voltage is not available on the terminal.
			Solution: Check that the terminal screws are tight
22	**Speed fbk loss [SFL]** SFL		**Condition:** Speed feedback loss alarm. The encoder is not connected, not connected properly or not powered: verify encoder operation by selecting the **PAR 260 Motor speed** parameter in the MONITOR menu.
			Solution: See parameter 2172 **SpdFbkLoss code** for information about the cause of the alarm and chapter 10.2 **Speed fbk loss** [22] alarm
23	**Overspeed [OS]** oS		**Condition:** Motor overspeed alarm. The motor speed exceeds the limits set in the **PAR 4540** parameter.
			Solution: - Limit the speed reference. - Check that the motor is not driven in overspeed during rotation.
24	**Speed ref loss [SRL]** SrL		**Condition: Speed reference loss alarm;** occurs if the difference between the speed regulator reference and the actual motor speed is more than 100 rpm. This condition occurs because the drive is in the current limit condition. It is only available in the Flux Vect OL and Flux Vect CL mode (see PAR 4550).
			Solution: Check that the load is not excessive.
25	**Not Used**		
26	**Power down [PRR]** Pd		**Condition:** The drive was enabled with no supply voltage at the power section.
			Solution: Emergency stop alarm. The Stop key on the keypad was pressed with the **Stop key mode** parameter set to **EmgStop&Alarm** in case of Remote->Terminal Strip or Remote->Digital or Local->Terminal Strip mode.
27	**Phaseloss out [PHLO]** PHLo		**Condition:** Output phase loss.
			Solution: Check Drive/motor connection.

Code	Error message shown on the display [on the integrated keypad]	Sub-code	Description
28	**OV safety [OVSF]**		**Condition:** Safety status alarm caused by Overvoltage situations.
			Solution: the firmware attemps to reset the card automatically. If the condition is removed (the alarm cleared message is displayed) the alarm can be reset and the drive restarted by deactivating and reactivating Enable and Start.
29	**Safety failure [SF]**		**Condition:** The state of the "safety function" is communicated to the regulation card via 2 digital inputs: SAFETY_ON (pin P1.8) and SAFETY_EN (pin P1.9)
			Solution: Switch the drive off and then back on. If the error persists, contact the technical service centre.
30	**Mot phase loss [MOTL]**		**Condition:** Output phase loss.
			Solution: Check Drive/motor connection.
31	**Rope change [ROPC]**		**This may occur in two conditions:** • the drive continues to run but the rope usage threshold set in parameter 3404 **Ropes change thr** has been reached; • the drive finishes the current travel and then locks because parameter 3414 Direction counter has reached 0 (corresponding to parameter 3412 **Ropes usage** = 100%).
			Solution: replace the ropes. By switching the drive off and back on you can run a single travel to bring the car to a better position for the procedure. After you have changed the ropes, reset the direction change counter to eliminate the lock condition.
32	**Not Used**		
33 ... 40	**Plc1 fault [PLC1]** ... **Plc8 fault [PLC8]**		**Condition:** Enabled application developed in the IEC 61131-3 environment has found the conditions for generating this specific alarm to be true. The meaning of the alarm depends on the type of application. For more information, refer to the documentation concerning the specific application.
		XXXXH-X	The XXXXH-X code indicates the reason for the error: make a note of this to discuss it with the service centre.
			Solution: Refer to the documentation concerning the enabled application. With regards to the standard application EFC refer to Functional Parameter Manual section LIFT ALARMS. For the applications DCP3/DCP4, EPC and CiA 417 refert to the application manual section ALARMS.
41	**Watchdog [WDT]**		**Condition:** this condition can occur during operation when the watchdog micro protection is enabled; the alarm is included in the list of alarms and alarm log. After this alarm: - the drive automatically runs a reset - motor control is not available.
		XXXXH-X	The XXXXH-X code indicates the reason for the error: make a note of this to discuss it with the service centre.
			Solution: If the alarm is the consequence of a change in the drive configuration (parameter setting, option installation, PLC application download) remove it. Turn the drive off and then on again.
42	**Trap error [TRAP]**		**Condition:** this condition can occur during operation when the trap micro protection is enabled; the alarm is included in the list of alarms and alarm log. After this alarm: - the drive automatically runs a reset - motor control is not available.
		XXXXH-X	The XXXXH-X (SubHandler-Class) code indicates the reason for the error: make a note of this to discuss it with the service centre.
			Solution: If the alarm was a consequence of a variation to the drive configuration (parameter setting, installation of an option, downloading of a PLC application), remove it. Switch the drive off and then switch it on again.
43	**System error [SYS]**		**Condition:** this condition can occur during operation when the operating system protection is enabled; the alarm is included in the list of alarms and alarm log. After this alarm: - the drive automatically runs a reset - motor control is not available.
		XXXXH-X	The XXXXH-X (Error-Pid) code indicates the reason for the error: make a note of this to discuss it with the service centre.
			Solution: If the alarm was a consequence of a variation to the drive configuration (parameter setting, installation of an option, downloading of a PLC application), remove it. Switch the drive off and then switch it on again.
44	**User error [USR]**		**Condition:** this condition can occur during operation when the software protection is enabled; the alarm is included in the list of alarms and alarm log. After this alarm: - the drive automatically runs a reset - motor control is not available.
		XXXXH-X	The XXXXH-X (Error-Pid) code indicates the reason for the error: make a note of this to discuss it with the service centre.
			Solution: If the alarm was a consequence of a variation to the drive configuration (parameter setting, installation of an option, downloading of a PLC application), remove it. Switch the drive off and then switch it on again.
45	**Param error [PE]**		**Condition:** if an error occurs during the enabling of the parameter database saved in the Flash memory; the alarm is included in the list of alarms and alarm log.
		XXXH-X	Code XXXXH-X indicates the number of the parameter (Hex-Dec) that has caused the error: make a note of this to discuss it with the service centre.
			Solution: Set the parameter causing the error to the correct value and run **Save parameter**. Switch the drive off and then switch it back on again.
46	**Load default [LD]**		**Condition:** this can occur during loading of the parameter database saved in the Flash memory it is normal if it appears in the following conditions: the first time the drive is switched on, when a new version of the firmware is downloaded, when the regulation is installed on a new size, when a new region is entered. If this message appears when the drive is already in use it means there has been a problem in the parameter database saved in the Flash memory. If this message is displayed the drive restores the default database, i.e. the one downloaded during production.

Code	Error message shown on the display [on the integrated keypad]	Sub-code	Description
	Ld	0001H-1	The database saved is not valid
		0002H-2	The database saved is not compatible
		0003H-3	The saved database refers to a different size and not to the current size
		0004H-4	The saved database refers to a different region and not to the current region
		Solution: Set the parameters to the desired value and execute **Save parameters**	
47	**Plc cfg error [PLCE]**	**Condition:** this can occur during loading of the MDPLC application The Mdplc application present on the drive is not run.	
	PLCE	0004H-4	The application that has been downloaded has a different Crc on the DataBlock and Function table.
		0065H-101	The application that has been downloaded has an invalid identification code (Info).
		0066H-102	The applciation that has been downloaded uses an incorrect task number (Info).
		0067H-103	The application that has been downloaded has an incorrect software configuration.
		0068H-104	The application that has been downloaded has a different Crc on the DataBlock and Function table.
		0069H-105	A Trap error or System error has occurred. The drive has automatically executed a Power-up operation. Application not executed. See the Alarm List for more information about an error that has occurred.
		006AH-106	The application that has been downloaded has an invalid identification code (Task).
		006BH-107	The application that has been downloaded uses an incorrect task number (Task).
		006CH-108	The application that has been downloaded has an incorrect Crc (Tables + Code)
		Solution: Remove the MDPLC application or download a correct MDPLC application.	
48	**Load par def plc [LDP]**	**Condition:** this can occur during loading of the parameter database saved in the Flash memory of the MDPLC application it is normal if it appears the first time the drive is switched on, after downloading a new application. If this message appears when the drive is already in use it means there has been a problem in the parameter database saved in the Flash memory. If this message appears the drive automatically runs the Load default command.	
	LdP	0001H-1	The database saved is not valid
		Solution: Set the parameters to the desired value and run Save parameter.	
49	**Key failed [KEY]**	**Condition:** this can occur at drive power-on if the wrong enabling key is entered for a given firmware function	
	HEY	0001H-1	Incorrect PLC key. PLC application not available.
		Solution: Contact Gefran to request the key to enable the desired firmware function.	
50	**Encoder error [ENC]**	**Condition:** this condition may occur when the drive is powered during encoder setup each time parameter 552 **Regulation mode** is set.	
	EnC	100H-256	**Cause**: An error occurred during setup; the information received from the encoder is not reliable. If the encoder is used for feedback the **Speed fbk loss** alarm is also generated.
			Solution: Take the recommended action for the **Speed fbk loss** alarm.
		200H-512	**Cause**: The firmware on the optional encoder card is incompatible with that on the regulation card. The information received from the encoder is not reliable
			Solution: Contact Gefran in order to update the firmware on the optional encoder card.
51	**Opt cfg change [OCFG]**	**Condition:** an optional card has been removed with respect to the configuration present when the last **Save parameters** command was executed or there is a fault on the optional card or on the regulation card.	
	oCFG	**Solution:** If the user has removed the card on purpose, execute **Save parameters**. If the user has not removed the card, identify and replace the faulty card.	

10.2 Speed fbk loss alarm according to the type of feedback

Note !

For the correct interpretation of the cause of the alarm trigger, it is necessary to transform the hex code indicated in parameter 15.13 **SpdFbkLoss code,** PAR 2172 , in the corresponding binary and verify in the encoder table that the active bits and related description are used.

Example with encoder Endat:

PAR 2172 = A0H (hex value)

In the table "Speed fbk loss [22] alarm with absolute encoder EnDat" A0 is not indicated in the value column.

A0 should be contemplated as a bitword with meaning A0 -> 10100000 -> bit 5 and bit 7 . The following causes simultaneously intervene:

- Bit 5 = 20H Cause: the SSI signal interferences cause an error in the CKS or parity.

- Bit 7 = 80H Cause: The encoder has detected an incorrect operation and communicates it to the converter through the Error bit. Bits 16..31 present the type of incorrect encoder operation detected.

The value is displayed in hexadecimal format on the optional and standard keypad.

- **Speed fbk loss [22] alarm with digital incremental encoder**

Bit	Value	Name	Description
0	0x01	CHA	**Cause:** no impulses or disturbance on incremental channel A.
			Solution: Check the connection of the encoder-drive channel A, check the connection of the screen, check the encoder supply voltage, check parameter 2102 **Encoder supply**, check parameter 2104 **Encoder input config**.
1	0x02	CHB	**Cause:** no impulses or disturbance on incremental channel B.
			Solution: Check the connection of the encoder-drive channel B, check the connection of the screen, check the encoder supply voltage, check parameter 2102 **Encoder supply**, check parameter 2104 **Encoder input config**.
2	0x04	CHZ	**Cause:** no impulses or disturbance on incremental channel Z.
			Solution: Check the connection of the encoder-drive channel Z, check the connection of the screen, check the encoder supply voltage, check parameter 2102 **Encoder supply**, check parameter 2104 **Encoder input config**, check parameter 2110 **Encoder signal check**

- **Speed fbk loss [22] alarm with sinusoidal incremental encoder**

Bit	Value	Name	Description
3	0x08	MOD_INCR	**Cause:** voltage level not correct or disturbance on signals of incremental channels A-B.
			Solution: Check the connection of the encoder-drive channels A-B, check the connection of the screen, check the encoder supply voltage, check parameter 2102 **Encoder supply**, check parameter 2108 **Encoder signal Vpp.**

- **Speed fbk loss [22] alarm with SinCos encoder**

Bit	Value	Name	Description
3	0x08	MOD_INCR	**Cause:** voltage level not correct or disturbance on signals of incremental channels A-B.
			Solution: Check the connection of the the encoder-drive channels A-B, check the connection of the screen, check the encoder supply voltage, check parameter 2102 **Encoder supply**, check parameter 2108 **Encoder signal Vpp**.
4	0x10	MOD_ABS	**Cause:** voltage level not correct or disturbance on signals of absolute SinCos channels.
			Solution: Check the connection of the the encoder-drive channels A-B, check the connection of the screen, check the encoder supply voltage, check parameter 2102 **Encoder supply**, check parameter 2108 **Encoder signal Vpp**.

- **Speed fbk loss [22] alarm with SSI absolute encoder**

Bit	Value	Name	Description
3	0x08	MOD_INCR	**Cause:** voltage level not correct or disturbance on signals of incremental channels A-B.
			Solution: Check the connection of the the encoder-drive channels A-B, check the connection of the screen, check the encoder supply voltage, check parameter 2102 **Encoder supply**, check parameter 2108 **Encoder signal Vpp**.
5	0x20	CRC_CKS_P	**Cause:** SSI signals not present or disturbed.
			Solution: Check the connection of the clock and encoder-drive data, check the connection of the screen, check the encoder supply voltage, check parameter 2102 **Encoder supply**, check parameter 2112 **Encoder SSI bits**.
8	0x100	Setup error	**Cause:** An error occurred during setup.
			Solution: Check the connection of the clock and encoder-drive data, check the connection of the screen, check the encoder supply voltage, check parameter 2102 **Encoder supply**, check parameter 2112 **Encoder SSI bits**.

- **Speed fbk loss [22] alarm with EnDat absolute encoder**

Bit	Value	Name	Description
3	0x08	MOD_INCR	**Cause: v**oltage level not correct or disturbance on signals of incremental channels A-B.
			Solution: Check the connection of the the encoder-drive channels A-B, check the connection of the screen, check the encoder supply voltage, check parameter 2102 **Encoder supply**, check parameter 2108 **Encoder signal Vpp**.
5	0x20	CRC_CKS_P	**Cause:** SSI signals not present or disturbed cause an error on CRC
			Solution: Check the connection of the clock and encoder-drive data, check the connection of the screen, check the encoder supply voltage, check parameter 2102 **Encoder supply**.
8	0x100	Setup error	**Cause:** An error occurred during setup.
			Solution: Check the connection of the clock and encoder-drive data, check the connection of the screen, check the encoder supply voltage, check parameter 2102 **Encoder supply**.

The following conditions occur while resetting the encoder following **Speed fbk loss** [22] activation

Bit	Value	Name	Description			
6	0x40	ACK_TMO	**Cause:** SSI signals not present or disturbed cause an error on CRC			
			Solution: Check the connection of the clock and encoder-drive data, check the connection of the screen, check the encoder supply voltage, check parameter 2102 **Encoder supply**.			
7	0x80	DT1_ERR	**Cause:** Encoder has detected malfunction and signals this to the drive via bit DT1. Bits 16..31 contain the type of malfunction detected by the encoder.			
			Solution: See the encoder manufacturer's technical guide.			
16.31			**Bit**		**=0**	**=1**
			0	Light source	OK	Failure (1)
			1	Signal amplitude	OK	Erroneous (1)
			2	Position value	OK	Erroneous (1)
			3	Over voltage	NO	Yes (1)
			4	Under voltage	NO	Under voltage supply (1)
			5	Over current	NO	Yes (1)
			6	Battery	OK	Change the battery (2)
			7..15			
			(1) Can also be set after the power supply is switched off or on. (2) Only for battery-buffered encoders			

- **Speed fbk loss [22] alarm with Hiperface absolute encoder**

Bit	Value	Name	Description
3	0x08		**Cause:** voltage level not correct or disturbance on signals of incremental channels A-B.
			Solution: Check the connection of the the encoder-drive channels A-B, check the connection of the screen, check the encoder supply voltage, check parameter 2102 **Encoder supply**, check parameter 2108 **Encoder signal Vpp**.
5	0x20		**Cause:** disturbed SSI signals cause a CKS error or Parity
			Solution: Check the connection of the clock and encoder-drive data, check the connection of the screen, check the encoder supply voltage, check parameter 2102 **Encoder supply**.
6	0x40		**Cause:** Encoder does not recognise the command that has been sent to it and replies with ACK. The SSI signals not present cause a TMO error.
			Solution: Check the connection of the clock and encoder-drive data, check the connection of the screen, check the encoder supply voltage, check parameter 2102 **Encoder supply.**
8	0x100		**Cause:** An error occurred during setup.
			Solution: Check the connection of the clock and encoder-drive data, check the connection of the screen, check the encoder supply voltage, check parameter 2102 **Encoder supply**.

The following conditions occur while resetting the encoder following **Speed fbk loss** [22] activation.

Bit	Value	Name	Description		
7	0x80	DT1_ERR	**Cause:** Encoder has detected malfunction and signals this to the drive via Error bit. Bits 16..31 contain the type of malfunction detected by the encoder.		
			Solution: See the encoder manufacturer's technical guide.		
16.31			**Type**	**Code**	**Description**
			Transmission	09h	Transmitted parity bit is incorrect
				0AH	Checksum of transmitted data is wrong
				0BH	Incorrect command code

Bit	Value	Name	Description		
				0CH	Wrong number of transmitted data
				0DH	Illegal transmitted command argument
				0FH	Wrong access authorization specified
				0EH	Selected field has READ ONLY status
				10H	Data field (re) definition not executable due to field size
				11H	Specified address is not available in selected field
				12H	Selected field does not yet exist
				00H	No encoder error, no error message
				03H	Data field operations disabled
				04H	Analog monitoring inoperative
				08H	Counting register overflow
				01H	Encoder analog signals are unreliable
				02H	Wrong synchronisation or offset
				05H-07H	Encoder-internal hardware fault, no operation possible
				1CH-1DH	Error in sampling, no operation possible
				1EH	Permissible operation temperature is exceeded
			(1) Can also be set after the power supply is switched off or on. (2) Only for battery-buffered encoders		

10.2.1 Reset Speed fbk loss alarm

The reasons for activating the **Speed fbk loss** alarm and the information acquired by the encoder are shown in parameter 2172 **SpdFbkLoss code.**

If no card has been installed the **Speed fbk loss** [22] alarm is generated and no cause is displayed in parameter 2172 **SpdFbkLoss code**. Several causes may be present at the same time.
If no card is recognised, the system runs a routine that always returns **Speed fbk loss** [22] active without specifying a cause.

10.2.2 Encoder error alarm

Setup is performed each time the drive is turned on, regardless of the regulation mode that has been selected. If an error is detected during setup the **Encoder error** alarm is generated with the following codes:

Bit	Value	Name	Description
8	**0x100**	**Setup error**	**Cause:** An error occurred during setup. When this has been signalled the information obtained from the encoder is not reliable.
			Solution: Take the action recommended for **Speed fbk loss** [22] alarm according to the type of encoder.
9	**0x200**	**Compatibility error**	**Cause:** Firmware on option card incompatible with firmware on regulation card. When this has been signalled the information obtained from the encoder is not reliable.
			Solution: Contact Gefran in order to update the firmware on the optional card.

10.3 Messages

Note ! For more information see **chapter 8.7**.

Index	Error message shown on the display [on the integrated keypad]	Sub-code	Description
1	**Load default param [LDEF]**	**Condition:** may occur during loading of the parameter database saved in flash normally appears in the following conditions: at initial power-on when a new firmware version is downloaded, when the regulation is installed on a new size, when the region is changed. If this message is displayed when the drive is already operating, this means that a problem has occurred in the parameter database saved in Flash. If this message is displayed, the drive automatically performs the **Load default** command.	
		0001H-1	The database saved is not valid
		0002H-2	The database saved is not compatible
		0003H-3	The database saved refers to a different size from the current size
		0004H-4	The database saved refers to a different region from the current region
		Solution: Set the parameters to the value required and perform **Save parameter**	
2 3 4	**Option detect slot 1 [OPT1]** **Option detect slot 2 [OPT2]** **Option detect slot 3 [OPT3]**	**Condition:** when the drive is turned on it recognises the presence of an optional card. One of the messages is shown on the display for a few seconds	
		0H-0	None
		0004H-4	Can
		0008H-8	Enc 1 EXP-DE-I1R1F2-ADL
		0108H-264	Enc 2 EXP-SE-I1R1F2-ADL
		0208H-520	Enc 3 EXP-SESC- I1R1F2-ADL
		0308H-776	Enc 4 EXP-EN/SSI- I1R1F2-ADL
		0408H-1032	Enc 5 EXP-HIP- I1R1F2-ADL
		0101H-257	I/O 1 EXP-IO-D4-ADL
		0501H-1281	I/O 1 EXP-IO-D8R4-ADL
		0901H-2305	I/O 1 EXP-IO-D16R4-ADL
		0F01-3841	I/O 1 EXP-IO-D12A2R4-ADL
		1301H-4865	I/O 1 EXP-IO-D8A4R4-ADL
		1501H-5377	I/O 1 EXP-IO-D6R2-F-ADL
		00FFH-255	Unknown
		Solution:	
5	**Autotune (motor)** **[SLFT]**	**Condition:** this may occur during the self-tuning procedure	
		0	No error
		1	N.A.
		2	N.A.
		3	The motor plate data parameters have changed but the **Take parameters** command, PAR 2020, has not been executed
			Solution: Execute the **Take parameters** command.
		4	The motor is not connected
			Solution: Connect the motor
		5	While running self-tuning the ESC key was pressed or the enable contact was opened or an alarm occurred. The self-tuning command was sent with the drive in the alarm condition
			Solution: Eliminate the reason for the alarm, remove the reason for the opening of the enable contact, reset alarms.
		6	A setting performed by the self-tuning function produced a parameter value outside the min or max range.
			Solution: Check the motor plate data or drive and motor sizes have been combined incorrectly.
		7	The self-tuning command was sent without being enabled.
			Solution: Close the enable contact before sending the self-tuning command
		8 ... 21	A setting performed by self-tuning has reached a measurement method limit
			Solution: Check the motor plate data or the drive and motor sizes have been combined incorrectly.
		30	The Enable was not given or removed in time during the phasing procedure.
			Solution: Repeat the phasing procedure and check the connection of the enable signals.
		Solution: If the message appears with a value other than 0, follow the instructions supplied for each particular case and repeat self-tuning. This should be performed using the wizard function available from the keypad (STARTUP WIZARD) and the Tool software on the PC. Pay attention to all motor plate data parmaeters, especially: - **Rated speed**, **Motor rated speed** in rpm. • (ADL300 for Asynchronous motor) Take care not to set the **Rated speed** parameter to the synchronous speed. The value of the **Rated speed** parameter must be less than: [(**Rated frequency** * 60) / **Pole pairs**]. • (ADL300 for Synchronous motor) Take care to set the **Rated speed** parameter to the synchronous speed. - **Rated frequency**, **Motor rated frequency** in Hz - **Pole pairs**, **Motor pole pairs** If the problem persists even after following the instructions supplied, confirm the values of the motor plate data parameters, execute the **Take parameters** command but not self-tuning.	
5	**Autotune** (phasing) (Only Synchronous) **[SLFT]**	**0**	No error
		40	The encoder card in use cannot manage automatic phasing.
			Solution: Use the appropriate encoder card
		41	Incorrect Incremental encoder impulse count
			Solution: Check the electric signals of the incremental encoder. Check the value of the encoder impulse parameter
		42	Incorrect absolute encoder impulse count
			Solution: Check the electric signals of the absolute encoder. Check the configuration of the absolute encoder

Index	Error message shown on the display [on the integrated keypad]	Sub-code	Description
		43	Incorrect incremental encoder impulse count or incorrect absolute encoder impulse count probably caused by an incorrect value of the pole pairs parameter or a load applied to the motor.
			Solution: Check the value of the pole pairs parameter, check whether a load is applied
		44	Incorrect incremental encoder impulse count probably caused by the incorrect value of the encoder impulse parameter.
			Solution: Check the electric signals of the incremental encoder. Check the value of the encoder impulse parameter.
		45	Incorrect absolute encoder impulse count
			Solution: Check the electric signals of the absolute encoder. Check the configuration of the absolute encoder.
		46	Incremental encoder impulse count sign inverted with respect to the absolute encoder impulse count.
			Solution: Invert the A+ and A- signal of the incremental encoder.
		47	Incremental encoder impulse count sign inverted with respect to the absolute encoder impulse count.
			Solution: Invert the A+ and A- signal of the absolute encoder.
		48	Incorrect phase sequence. (Message not signalled)
			Solution: The automatic procedure has modified the setting of the Encoder direction parameter. No other action is required
		49	During automatic phasing a communication channel is activated between the drive and encoder. An error has occurred on this communication channel.
			Solution: Repeat the procedure.
		Solution: If the message has a value other than 0 follow the instructions provided for each case and repeat automatic phasing.	
6	**Power config [PC]**	**Condition:** may occur during recognition of power cards. If this message is displayed, it is not possible to drive the motor.	
		0020H-32	The power card is configured for a drive that is incompatible with the regulation card
		0021H-33	The configuration of the power card is not compatible with the regulation card
		0017H-23	The configuration required is not available on the power card
		Solution: Download the correct configuration on the power card	
7	**Save par failed [FAIL]**	**Condition:** during transfer of the parameters from the drive to the memory of the keypado	
		0H-0	Communication error
		0023H-35	Communication error
		0023H-36	Communication error
		0025H-37	The data saved on the keypad are not valid
		Solution:	
8	**Load par failed [FAIL]**	**Condition:** during transfer of the parameters from the memory of the keypad to the drive	
		0H-0	Communication error
		0023H-35	Communication error
		0023H-36	Communication error
9	**Load par incomplete [FAIL]**	**0025H-37**	The data saved on the keypad are not valid. No parameter is transferred from the keypad to the drive
		0026H-38	Incompatible drive series. No parameter is transferred from the keypad to the drive
		0027H-39	Incompatible software version. All the parameters present in the memory of the keypad have been transferred to the drive. The set of parameters transferred refers to a drive with a different firmware version; therefore, certain parameters may not be updated.
		0028H-40	Incompatible drive size. All the parameters present in the memory of the keypad (excluding those that depend on the size of the drive), have been transferred to the drive. The parameters that depend on size maintain their original value.
		0029H-41	Error during saving of parameters on the drive. All the parameters present in the memory of the keypad have been transferred to the drive. The transfer of one or more parameters has caused an "out of range" error, or one or more parameters does not exist. At the end of transfer, one or more parameters may not have been updated.
		002AH-42	PLC application release and version not compatible. All parameters in the keypad memory have been transferred to the drive. The transferred set of parameters relates to a drive with a PLC application in which the version and release of the application are different. As a result some of the PLC application parameters may not be updated.
		002BH-43	PLC application not compatible. All the parameters in the keypad memory except those relating to the PLC applciation have been transferred to the drive. The transferred set of parameters relates to a drive with a different PLC application. As a result none of the PLC application parameters are updated.
		Solution: Recover a set of parameters from a compatible drive (model and size)	
10	**Options config error [OPTC]**	**Condition:** may occur at drive start-up, during recognition of the optional cards installed	
		0001H-1	Non-permissible optional card in slot 1
		0002H-2	Non-permissible optional card in slot 2
		0004H-4	
		0010H-16	Conflict slot 1 with slot 2
		0020H-32	
		0040H-64	
		Solution: Remove the optional cards from the incorrect slots and insert them in the correct slots	
11	**Load def plc [LDPL]**	**Condition:** may occur during loading of the parameter database saved in the Flash of the Mdplc application Normally appears at initial power-on after downloading a new application. If this message is displayed when the drive is already operating, this means that a problem has occurred in the parameter database saved in Flash. If this message appears the drive restores the default database, i.e. the one that was downloaded.	
		0001H-1	The database saved is not valid
		Solution: Set the parameters to the value required and perform **Save parameter**	
12	**Plc cfg error [PLCE]**	**Condition:** may occur during loading of the Mdplc application The Mdplc application present on the drive is not run.	
		0004H-4	The application downloaded has a different Crc on DataBlock and Function table

Index	Error message shown on the display [on the integrated keypad]	Sub-code	Description
	PLCE	0065H-101	The application downloaded has an invalid identifier (Info)
		0066H-102	The application downloaded has an incorrect task number (Info)
		0067H-103	The application downloaded has an incorrect software configuration
		0068H-104	The application downloaded has a different Crc on DataBlock and Function table
		0069H-105	A Trap error or System error has occurred. The drive automatically performs a Power-up operation. The application is not run. See in Alarm List for further information regarding the error occurred
		006AH-106	The application downloaded has an incorrect identifier (Task)
		006BH-107	The application downloaded has an incorrect task number (Task)
		006CH-108	The application downloaded has an incorrect Crc (Tables + Code)
		Solution: Remove the Mdplc application or download a correct Mdplc application	
13	**Plc 1 [PLC1]** PLC1	Reserved messages and dedicated to the PLC application. See the application manual.	
14	**Plc 2 [PLC2]** PLC2		
15	**Plc 3 [PLC3]** PLC3		
16	**Plc 4 [PLC4]** PLC4		
17	**Opt bus fault [OPTB]** oPtb	**Condition:** this may occur when the drive is turned on, during fieldbus card setup. Error during configuration or communication error.	
		XXX0H-X	If the first digit to the left of "H" in the alarm sub-code is 0, the error regards a communication problem.
		XXX0H-X	If the first digit to the left of "H" in the alarm sub-code is other than 0, the error regards a configuration problem.
		Solution: For configuration errors, check the configuration of the bus communication, type of bus, baudrate, address, parameter setting For communication errors, check wiring, termination resistors, disturbance immunity, timeout settings. For further details, please refer to the user guide for the specific bus.	
18	**Wrong key [KEYF]** HE4F	**Condition**: this may occur when powering the drive, if the incorrect enable key is inserted for a given firmware function.	
		xxxxH-x	
		Solution: Ask Gefran to supply the correct key to enable the desired firmware function.	
19	**Key expiring [KEYE]** HE4E	**Condition:** this may occur at drive power-on if the incorrect enabling key was inserted for a given firmware function. At this stage the firmware function can still be used freely, but this time limit is about to expire	
		xxxxH-x	Number of hours for which the function can still be used freely.
		Solution: Ask Gefran for the correct key to enable the desired firmware function.	
20	**SD card error [FAIL]** FAIL	**Condition:** this condition may occur when sending data from the drive to the SD card or from the SD card to the drive. It could be due to a memory card that is incompatible or not present.	
		XXX0H-X	Communication error
		Solution: Check the memory card being used	
21	**Parameter error [PE]** PE	**Condition:** if an error occurs during activation of the parameter database saved in flash; the alarm is inserted in the alarm list and alarm log.	
		XXX0H-X	Code XXXXH-X indicates the number of the parameter (Hex-Dec) that has caused the error: make a note of this to discuss it with the service centre.
		Solution: Set the parameter that has caused the error to the correct value and execute **Save parameters**, switch the drive off and then back on.	
22	**Encoder error [ENCE]** EnCE	**Condition:** this condition may occur when the drive is powered during encoder setup each time parameter 552 **Regulation mode** is set.	
		100H-256	**Cause**: An error occurred during setup; the information received from the encoder is not reliable. If the encoder is used for feedback the **Speed fbk loss** alarm is also generated.
			Solution: Take the recommended action for the **Speed fbk loss** alarm.
		200H-512	**Cause**: The firmware on the optional encoder card is incompatible with that on the regulation card. The information received from the encoder is not reliable
			Solution: Contact Gefran in order to update the firmware on the optional encoder card.
23	**Options cfg changed [OCFG]** oCFG	**Condition**: this may occur when powering the drive if an expansion card has been removed or replaced or the incorrect enable key is inserted for a given firmware function.	
		0064H-100	Card removed from slot 1
		0014H-20	Card removed from slot 2
		0078H-120	Card removed from slot 1 and from slot 2
		Solution: Check the hardware configuration, then press ESC. Save the parameters (**Save parameters**, menu 04.01 par 550) to save the new hardware configuration.	
24	**Fw update failed [FAIL]** FAIL	**Condition:** When updating the firmware, check whether the file is in the wrong format or corrupt.	
		Solution: try again with a correct file.	

Appendix

A.1 - ADL300 Advanced Configuration

ADL300 is coded as the Advanced version and does not implement any I/O or encoder expansion cards.
The user may integrate any of the available options, to meet specific system requirements (an I/O card must always be present to use the drive). These integrations can be performed quickly and simply, by inserting the cards in the relative connectors on the regulation card (provided as standard with the drive and not interchangeable).

Note!

Connections and technical data of I/O and encoder expansion cards are given in sections A.2 and A.3.

The firmware automatically recognises the ADL300 Basic or Advanced drive. The type of drive is displayed in the "Drive info" menu, parameter 476 Drive type (0= Basic, 1 = Advanced, 2 = Basic-VGA).

				ADL300 Advanced					
		Type / Description	Code	**ADL300A – ... –KBL–4** 230-400-480 Vac, 3ph	**ADL300A – ... –KBL–F–4–C** 230-400-480 Vac, 3ph EMI Filter - CAN	**ADL300A – ... –KBL–2T** 200-230 Vac, 3ph	**ADL300A – ... –KBL–F–2T–C** 200-230 Vac, 3ph EMI Filter - CAN	**ADL300A – ... –KBL–2M** 200-230 Vac, 1ph	**ADL300A – ... –KBL–2M-C** 200-230 Vac, 1ph CAN
Regulation		**R-ADL300-A** Basic regulation card	--	●	×	●	×	●	×
		RC-ADL300-A Regulation card with integrated CAN	--	×	●	×	●	×	●
I/O card		**EXP-IO-D4-ADL** 2 digital inputs + 2 digital outputs	S567L	○	○	○	○	○	○
		EXP-IO-D5R3-F-ADL 5 Digital inputs + 3 Relay outputs	S5L08	○	○	○	○	○	○
		EXP-IO-D6A4R2-F-ADL 6 Digital inputs + 2 analog outputs + 2 analog inputs + 2 relay outputs	S580L	○	○	○	○	○	○
		EXP-IO-D8R4-ADL 8 Digital inputs + 4 Relay outputs	S568L	○	○	○	○	○	○
		EXP-IO-D8A4R4-ADL 8 digital inputs + 2 analog outputs + 4 analog inputs + 2 relay outputs	S570L	○	○	○	○	○	○
		EXP-IO-D12A2R4-ADL 8 digital inputs + 4 digital outputs + 4 analog inputs + 2 relay outputs	S569L	○	○	○	○	○	○
		EXP-IO-D16R4-ADL 12 digital inputs + 4 digital outputs + 4 relay outputs	S566L	○	○	○	○	○	○
Encoder cards		**EXP-DE-I1R1F2-ADL** Digital encoder 3 Channels + Repeat + 2 Freeze	S5L04	○	○	○	○	○	○
		EXP-DE-I1-ADL Digital encoder 2 Channels	S5L36	○	○	○	○	○	○
		EXP-SESC-I1R1F2-ADL Sinusoidal SinCos encoder 3 Channels + Repeat + 2 Freeze	S5L06	○	○	○	○	○	○
		EXP-SESC-I1R1-V-ADL Sinusoidal SinCos encoder 3 Channels + Repeat (VGA connectors)	S5L39	○	○	○	○	○	○
		EXP-EN/SSI-I1R1F2-ADL Sinusoidal encoder - Absolute EnDat (or EnDat Full Digital) + Repeat + 2 Freeze	S5L07	○	○	○	○	○	○
		EXP-SE-I1R1F2-ADL Sinusoidal encoder 3 Channels + Repeat + 2 Freeze	S571L	○	○	○	○	○	○
		EXP-HIP-I1R1F2-ADL Hiperface encoder 3 Channels + Repeat + 2 Freeze	S572L	○	○	○	○	○	○

● = standard, ○ = optional , × = not possible

A.1.1 - Inserting expansion cards

- **Slot 1:** dedicated to I/O cards (EXP-IO-...-ADL)
- **Slot 2:** dedicated to encoder expansion cards (EXP-DE-ADL, EXP-SE-ADV, etc.)

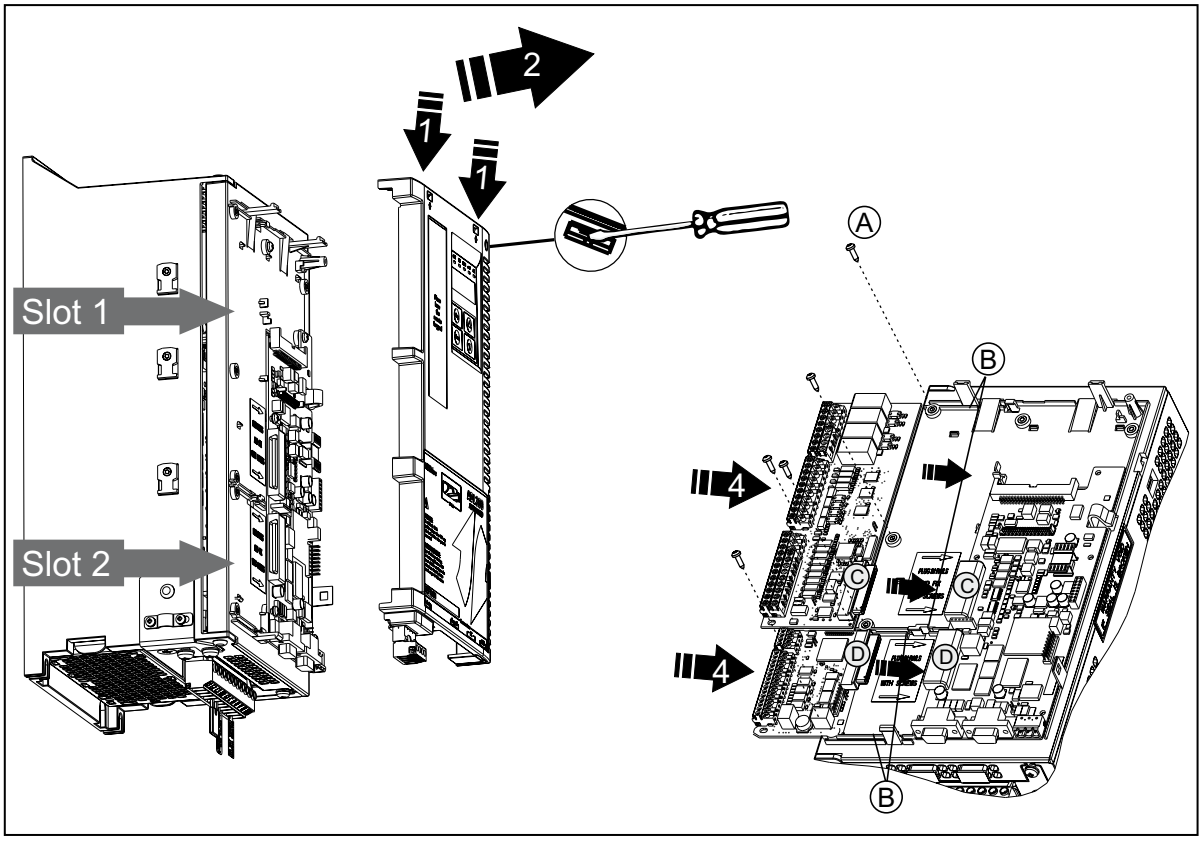

1. Remove the top cover: insert a screwdriver into the holes at the top of the plastic card cover and push gently
2. Raise the cover as shown in the figure.
3. *To replace an expansion card, loosen the screws (A) and remove the card to be replaced.*

4A. Insert the EXP-IO-...-ADL card in the guide bars (B) of Slot 1 until the male terminal (C) is fully inserted in the female terminal (C) of the regulation card.

4B. Insert the Encoder card in the guide bars (B) of Slot 2 until the male terminal (D) is fully inserted in the female terminal (D) of the regulation card.

5. Tighten the screws (A) provided with the card.

A.2 - I/O Card

- **EXP-IO-D4-ADL**

1 enable input (Enable) + 2 digital inputs (DI) + 2 digital outputs (DO)

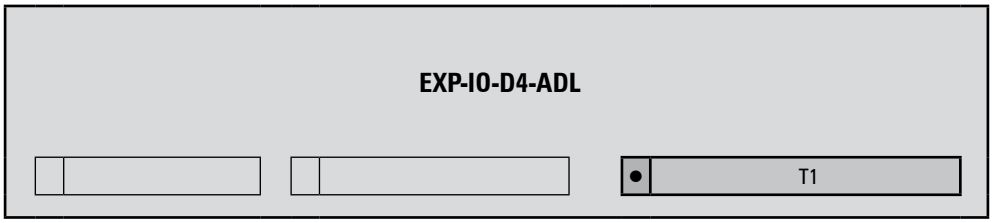

Lift commands Associated parameter		1420, Dig output 6X src	1418, Dig output 5X src			*Start reverse*	*Start forward*				
-	-	DO 2	DO 1	DO CM	DO PS	DI 2	DI 1	EN HW	DI CM	OV out	24 out
--	--	26	27	28	29	7	8	9	10	11	12

- **EXP-IO-D5R3-F-ADL**

1 enable input (Enable) + 5 digital inputs (DI) + 3 relay outputs (RO).
The terminals of this card are not extractable.

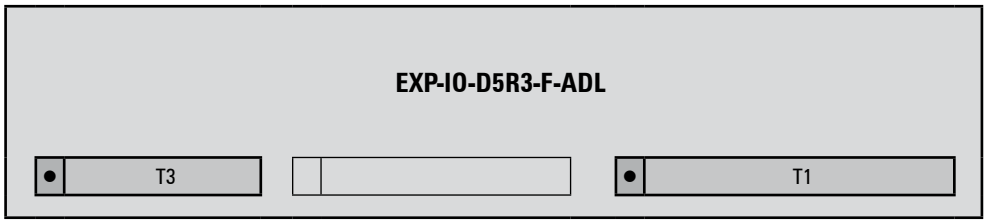

Lift commands Associated parameter			1414, Dig output 3X src	*Run Contactor*	1412, Dig output 2X src	*Brake Contactor*	1410, Dig output 1X src	*Drive OK*
			RO 3O	RO 3C	RO 2O	RO 2C	RO 1O	RO 1C
			52	53	54	55	56	57

Lift commands Associated parameter			*Multispeed 1*	*Multispeed 0*	*Emergency*	*Start reverse*	*Start forward*				
			DI 5	DI 4	DI 3	DI 2	DI 1	EN HW	DI CM	OV out	24 out
			4	5	6	7	8	9	10	11	12

- **EXP-IO-D6A4R2-F-ADL**

1 enable input (Enable) + 6 digital inputs (DI) + 2 ingressi analogici (AI) + 2 analog outputs (AO) + 2 relay outputs (RO).
The terminals of this card are not extractable.

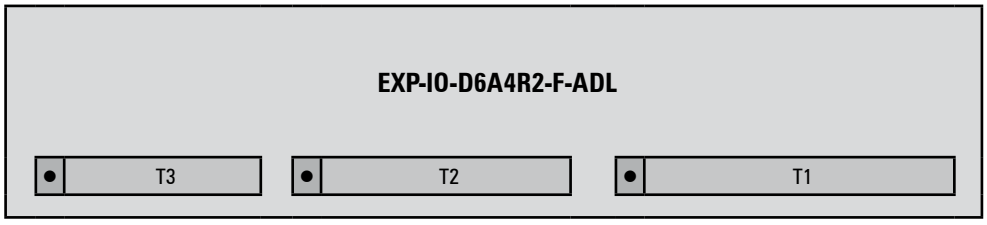

Lift commands Associated parameter				1412, Dig output 2X src	*Brake Contactor*	1410, Dig output 1X src	*Drive OK*
				RO 2O	RO 2C	RO 1O	RO 1C
				54	55	56	57

Associated parameter										
AI 2N	AI 2P	AI 1N	AI 1P	AO 2N	AO 2P	AO 1N	AO 1P	-10 OUT	+10 OUT
40	41	42	43	44	45	46	47	48	49

Lift commands Associated parameter			*Multispeed 2*	*Multispeed 1*	*Multispeed 0*	*Emergency*	*Start reverse*	*Start forward*				
			DI 6	DI 5	DI 4	DI 3	DI 2	DI 1	EN HW	DI CM	OV out	24 out
			3	4	5	6	7	8	9	10	11	12

- **EXP-IO-D8R4-ADL**

The digital I/O integrated in the ADL300B is recognised as this expansion card.
1 enable input (Enable) + 8 digital inputs (DI) + 4 relay outputs (RO)

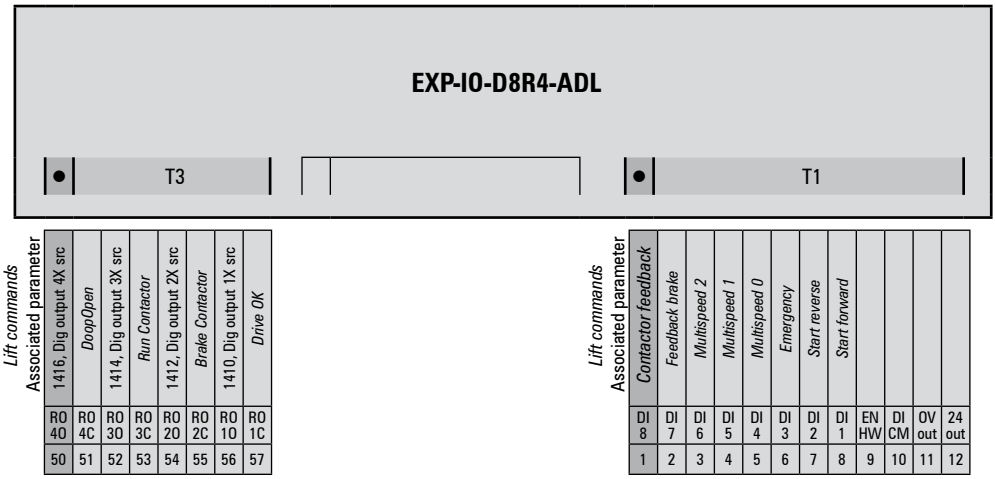

- **EXP-IO-D8A4R4-ADL**

1 enable input (Enable) + 8 digital inputs (DI) + 2 analog inputs (AI) + 2 analog outputs (AO) + 4 relay outputs (RO)

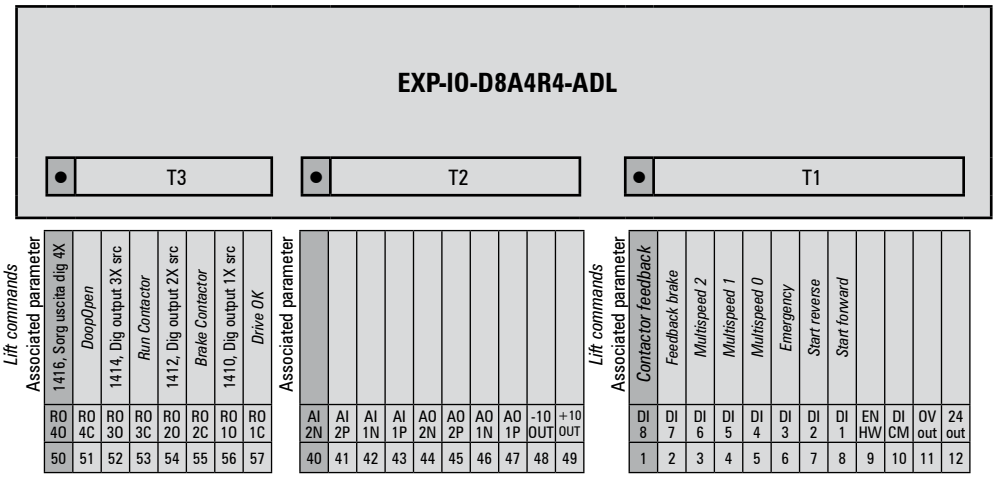

- **EXP-IO-D12A2R4-ADL**

1 enable input (Enable) + 8 digital inputs (DI) + 4 digital outputs (DO) + 2 analog inputs (AI) + 4 relay outputs (RO)

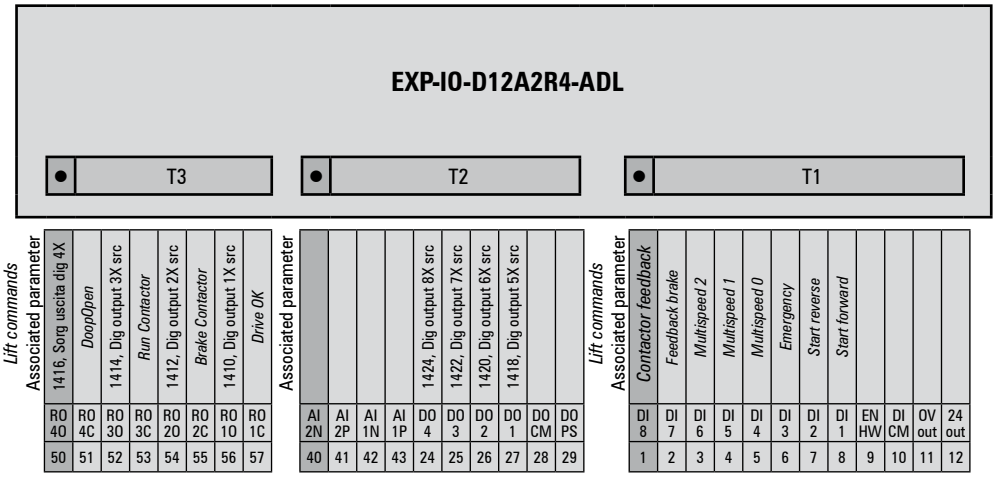

- **EXP-IO-D16R4-ADL**

1 enable input (Enable) + 12 digital inputs (DI) + 4 digital outputs (DO) + 4 relay outputs (RO)

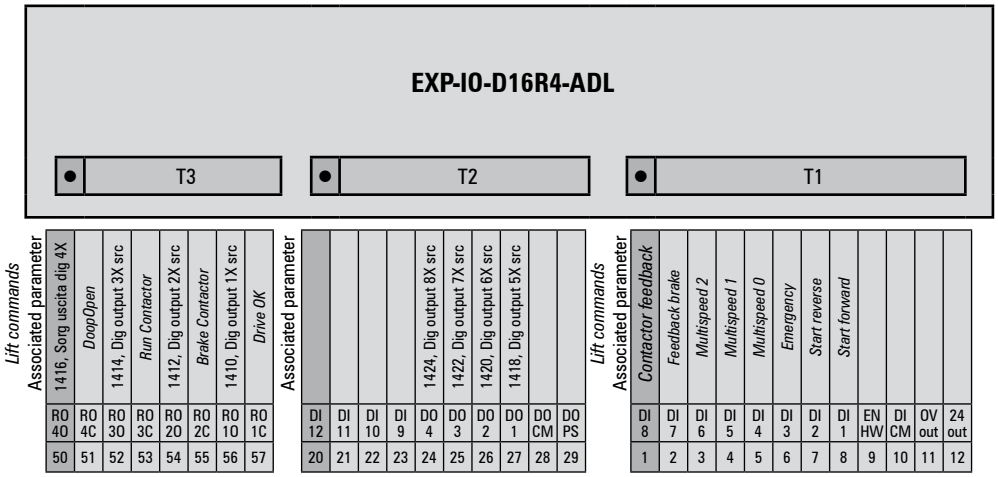

A.2.1 Input/Output features

24V DC power supply	
Tolerance	± 10%
Maximum current	150 mA
Isolation	1 KV

- **Digital inputs (DI) and enable hardware inputs (EN-HW)**

Description	Features
Type	24 V PNP / NPN
Operating voltage	0 V to + 24 V (+ 30 V max)
Load	5 mA @ +24 V - R_L = 4.7 kΩ
Thresholds	V_{IC} < 5 V – V_{IH} > 15 V
Isolation	Yes – Functional (> 1 kV)
PNP 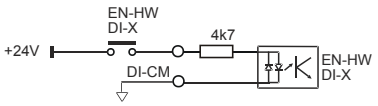	NPN 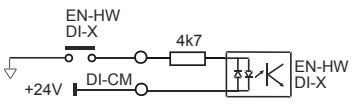

- **Digital outputs (DO)**

Description	Features
Type	24V PNP / NPN
Operating voltage	0V to + 24V (+ 30V max)
Load	20mA @ +24V - R_L = 1,2 kΩ (40mA max)
Thresholds	V_{OL} < 1V – V_{OH} > V_{ALI}-1
Isolation	Si – Funzionale (> 1 kV)
PNP 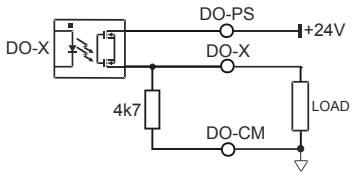	NPN 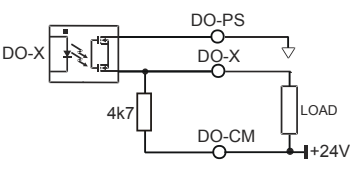

- **Relay outputs (RO)**

Description	Features
Type	NO Relay (single contact)
Operating voltage	250 VAC / - 30 VDC / 2 A
Load	50 mA @ +10 V
Isolation	Yes – 4 kV
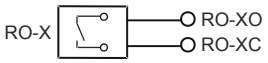	

- **Analog inputs (AI)**

Description	Features
Type	Voltage differential
Input voltage	± 10 V (± 12.5 V full scale)
Input R	10 kΩ
Resolution	12 Bits (11 + sign)
Precision	1% of full scale
Isolation	NO
Description	**Features**
Type	Current differential
Input current	0 (4) mA to 20 mA
Input R	500 Ω
Resolution	12 Bits (11 + sign)

Precision	1% of full scale
Isolation	NO

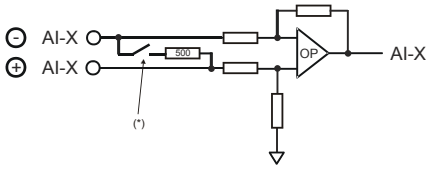

(*) Select input V/I (V=OFF, I=ON)

- **Fast Input Inputs (Freeze)**

Description	Features
Type	24VDC PNP Input
Input voltage	+24VDC ±20%
Load	8mA @ 24V, RL = 2,7kΩ
Thresholds	$V_{IL} < 2V$, $V_{IH} > 19V$
Isolation	Yes, functional (>1kV)

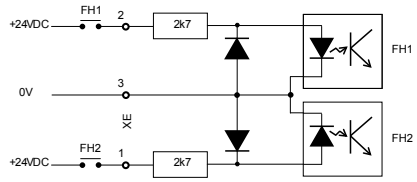

- **Selection of Voltage/Current at analog inputs and output**

In addition to programming the parameter (PAR.1602 - 1652 - 1898) the position of switches S5-S4-S3 on the I/O card must also be checked.

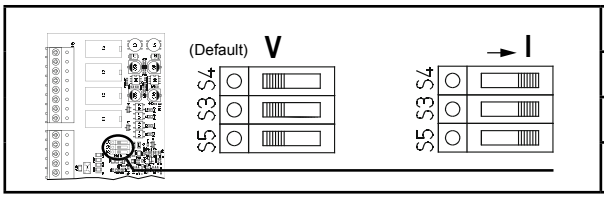

Switch (I/O card)	Parameter combination	
S3	1602	Analog inp 1X type
S4	1652	Analog inp 2X type
S5 (*)	1898	Analog out 2X type

(*) Not present on the R-ADL300-C (ADL300B-...-AD1) regulation card.

- **Analog outputs (AO)**

Description	Features
Type	Single-ended in voltage
Input voltage	± 10 V (± 12.5 V full scale)
Load	5 mA @ ± 10 V - RL = 2.2 kΩ
Resolution	12 Bits (11 + sign)
Precision	2% of full scale
Isolation	NO
Description	Features
Type	Single-ended in current (only output 2)
Input current	0 (4) mA to 20 mA
Input R	500 Ω
Resolution	12 Bits (11 + sign)
Precision	2% of full scale
Isolation	NO

OUTPUT #1

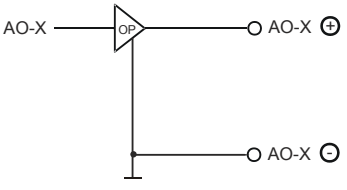

OUTPUT #2

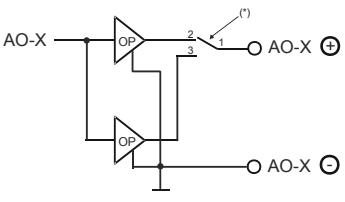

(*) Select output V/I (only for output 2, V=1-2, I=1-3)

- **Analog reference outputs (±10)**

Description	Features
Type	Single-ended in voltage
Operating voltage	± 10 V
Load	5 mA @ ± 10 V - R_L = 5 kΩ (max 10 mA)
Precision	1% of full scale
Isolation	NO
Short-circuit protection	YES

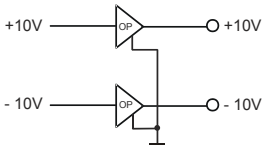

A.3 Encoders and encoder expansion cards

A.3.1 Encoders

Encoders provide motor speed and position feedback

The regulation algorithms in the ADL300 drive are capable of controlling asynchronous and permanent magnet synchronous (brushless) motors. With asynchronous motors the regulation algorithm may or may not use the speed measurement obtained from the encoder reading. With brushless motors the regulation algorithm needs an encoder that also allows the absolute motor position to be verified.

Attention

The ADL300B drive supports digital incremental and sinusoidal encoders managed via the standard encoder card. The type of encoder that is connected must be selected via software: PAR 2132 Encoder mode (menu 15 - ENCODER CONFIG).

The drive ADL300A supports different types of encoders, each managed by a specific expansion card. The card is automatically recognised at startup

Possible configurations are summarised in the table:

			Asynchronous				Brushless	
			SSC		Flux Vector OL	Flux Vector CL	Flux Vector CL	PAR 552 – Regulation mode
			SSC OL	SSC CL	-	-		PAR 2444 – Slip comp mode
Encoder type	Card code **EXP – xx**	PAR 532, Slot2 card type						
Incremental Digital	**DE**	Enc 1	-	Recommended	-	Recommended	Possible	
Incremental sinusoidal	**SE**	Enc 2	-	Possible	-	Recommended	Possible	
Incremental sinusoidal + absolute SinCos	**SESC**	Enc 3	-	Possible	-	Possible	Recommended	
Incremental sinusoidal + Absolute Endat/SSI	**EN/SSI**	Enc 4	-	Possible	-	Possible	Recommended	
Incremental sinusoidal + Hiperface absolute	**HIP**	Enc 5	-	Possible	-	Possible	Recommended	

- = encoder not used

Encoders must be fitted to the motor shaft using anti-backlash couplings. The best control is achieved with configurations that have incremental sinusoidal channels.
For electrical connections always use good quality cables with shielded twisted pairs, according to the procedures and specifications described in the following paragraphs.

The configuration parameters for each encoder can be found in the ENCODER CONFIG.
In the event of an encoder malfunction the drive generates the **Speed fbk back loss** alarm and the cause of the malfunction is shown in parameter 2172 **SpdFbkLoss code**.
If the encoder is not used by the regulation algorithm the drive still manages the encoder position reading but does not generate an alarm in case of malfunctioning.

A.3.2 Phasing

In order for the ADL300 Brushless regulation algorithm to function correctly, it is necessary to know the position of the rotor with respect to the stator power phases. Therefore the 0° position provided by the absolute encoder must be known with respect to the position of a motor pole and the encoder count direction must match the motor power phases.
This is called phasing. Phasing can be performed manually, directly by means of the mechanical encoder assembly position on the motor shaft and on the phases, or using the automatic procedures available in the drive.

Phasing must always be repeated whenever:
- the encoder assembly position is changed
- the phase sequence of the motor power supply connection is changed
- the encoder incremental signal connection is changed
- the encoder absolute signal connection is changed
- the value of the PAR 2008 **Pole pairs** parameter is changed
- the value of the PAR 2100 **Encoder pulses** parameter is changed
- the drive is replaced (alternatively, download parameters taken from previous drive)

There are two different procedures that can be launched by writing two different parameters:

- PAR 2190 **Autophase rotation** -> rotation phasing:

this procedure must be performed with the motor free to turn and with no load applied.

- PAR 2192 **Autophase still** -> static phasing:

this procedure must be performed with the motor still and brake applied.

Rotation phasing
This procedure is based on the possibility of moving the motor, by a maximum angle of two pole pairs, to find correct encoder phasing, cross-check the available encoder and motor data and, if the encoder count direction does not match the phase sequence of the motor power supply, correct it by automatically modifying PAR 2130 **Encoder direction**.

Note!

In the case described above, a positive speed reference could generate a rotation in reverse with respect to that defined as positive for the encoder (usually clockwise), while still ensuring good motor control.

The encoder direction defined as positive can be stored as the positive reference direction by inverting two motor power phases and repeating the rotation phasing procedure.
If the procedure is terminated without any errors, code 0 is shown on the keypad, otherwise if any differences have been detected that cannot be corrected by the drive, one of the codes listed in Autotune (phasing), **see chapter 10.3 Messages**, is shown.

Possible faults:
- faults in electric signals not detected with a "**Speed fbk loss [22]**" alarm
- error in the PAR 2008 **Pole pairs** parameter setting
- error in the PAR 2100 **Encoder pulses** parameter setting

Static phasing
Using this method, in which the motor cannot move, the encoder and motor data cannot be cross-checked to verify the matching of parameters or count direction.
This condition must therefore be checked before launching the procedure.

A.3.3 Encoder cards

Note ! The encoder power supply must be adequate considering the cable length and the absorption rates as shown in table (1) at the end of this chapter.

EXP-DE-I1R1F2-ADL

Digital Incremental Encoder. This is the default card supplied with drives to control asynchronous motors in field-oriented flux vector mode (FOC).

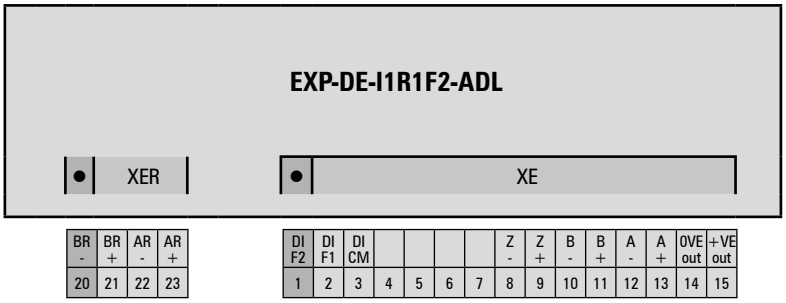

(TTL Line-driver)

Channels	A+ A-, B+ B-, Z+ Z-, differential line drivers, optoisolated. Management of loss of encoder signals
Max frequency	200 kHz (check the number of encoder impulses according to the maximum speed)
Number of impulses	min 128, max 16384 (default 1024)
Electrical interface	TTL (ref. GND) Ulow ≤ 0.5 V Uhigh ≥ 2.5 V
Load capacity	10 mA @ 5.5 V (Zin 365Ω)
Programmable internal power supply	min +5.2 V, max +6.0 V (default + 5.2 V) – Imax 150 mA. See table (1)
Cable length	max 50m

INCREMENTAL DIGITAL ENCODER (DE) PUSH-PULL/LINE DRIVER

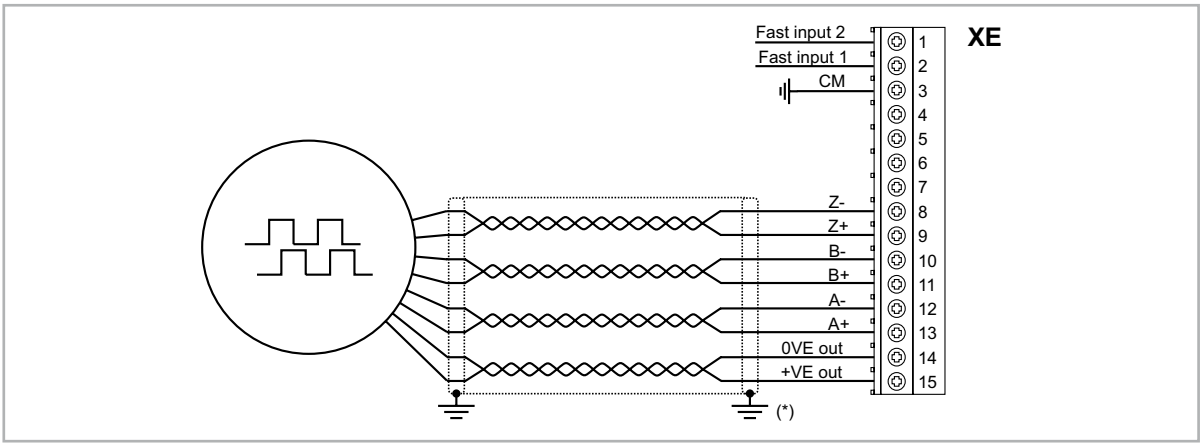

(*) Connection of shielding, see figure 7.2.4

(TTL/HTL push-pull)

Channels	A/B/Z, complementary push-pull, optoisolated. Loss of encoder cannot be managed with single-ended versions. In this case disable the **Speed Fbk Loss**.
Max frequency	100 kHz (check the number of encoder impulses according to the maximum speed)
Number of impulses	min 128, max 16384 (default 1024)
Electrical interface	HTL Ulow ≤ 3.0 V Uhigh ≥ Venc - 3.0 V
Load capacity	7 mA @ 20.0 V (Zin 2635Ω)
V max Digital Inputsi (*)	HTL = 27V max. TTL = 7V max
Programmable internal power supply	min +6.0 V, max +20.0 V (default + 6.0 V) – Imax 150 mA. See table(1)
Cable length	max 50m

(*) with external supply.

INCREMENTAL DIGITAL ENCODER (DE) SINGLE ENDED NPN O.C.

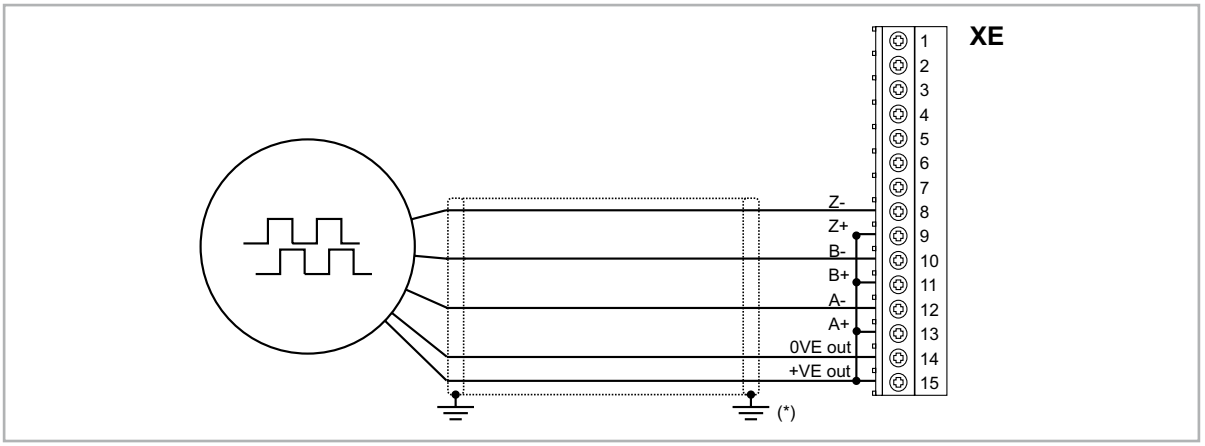

INCREMENTAL DIGITAL ENCODER (DE) SINGLE ENDED PNP O.C.

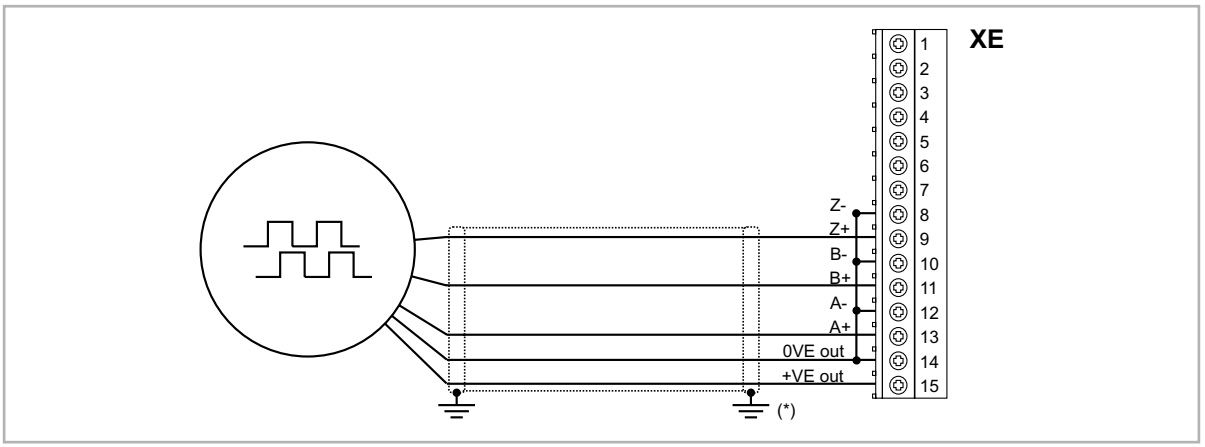

(*) Connection of shielding, see figure 7.2.4

EXP-DE-I1-ADL

Digital Incremental Encoder.

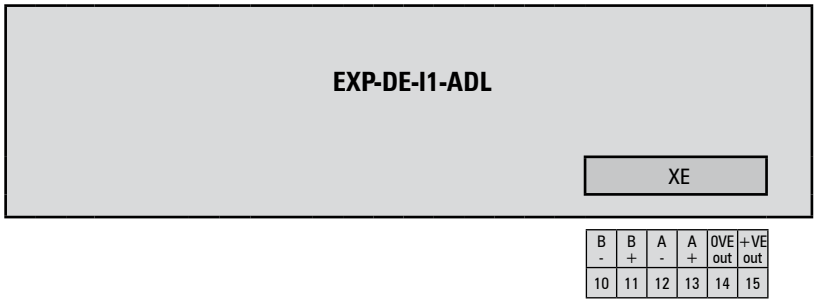

(TTL Line-driver)

Channels	A+ A-, B+ B-, differential line drivers, optoisolated.
Max frequency	200 kHz (check the number of encoder impulses according to the maximum speed)
Number of impulses	min 128, max 16384 (default 1024)
Electrical interface	TTL (ref. GND) Ulow ≤ 0.5 V Uhigh ≥ 2.5 V
Load capacity	10 mA @ 5.5 V (Zin 365Ω)
Programmable internal power supply	min +5.2 V, max +6.0 V (default + 5.2 V) — Imax 150 mA. See table (1)
Cable length	max 50m

INCREMENTAL DIGITAL ENCODER (DE) PUSH-PULL/LINE DRIVER

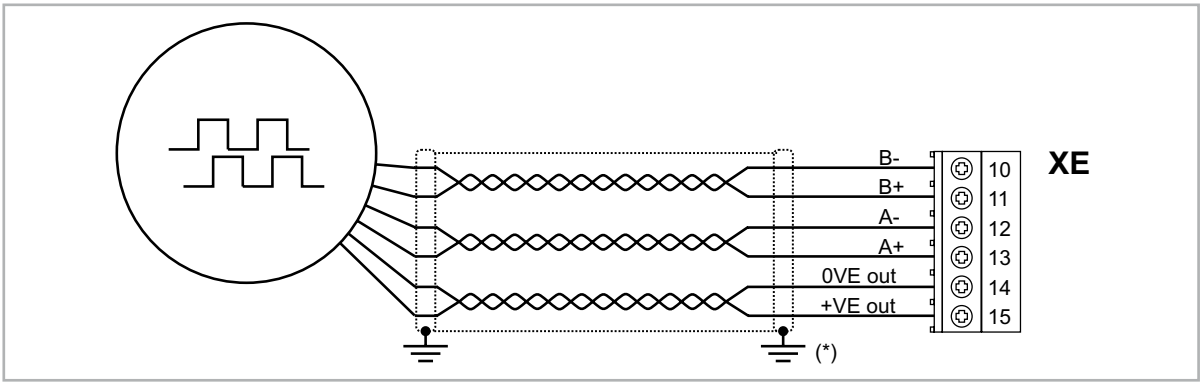

(*) Connection of shielding, see figure 7.2.4

(TTL/HTL push-pull)

Channels	A/B, complementary push-pull, optoisolated. Loss of encoder cannot be managed with single-ended versions. In this case disable the **Speed Fbk Loss**.
Max frequency	100 kHz (check the number of encoder impulses according to the maximum speed)
Number of impulses	min 128, max 16384 (default 1024)
Electrical interface	HTL Ulow ≤ 3.0 V Uhigh ≥ Venc - 3.0 V
Load capacity	7 mA @ 20.0 V (Zin 2635Ω)
V max Digital Inputsi (*)	HTL = 27V max. TTL = 7V max
Programmable internal power supply	min +6.0 V, max +20.0 V (default + 6.0 V) — Imax 150 mA. See table(1)
Cable length	max 50m

(*) with external supply.

INCREMENTAL DIGITAL ENCODER (DE) SINGLE ENDED NPN O.C.

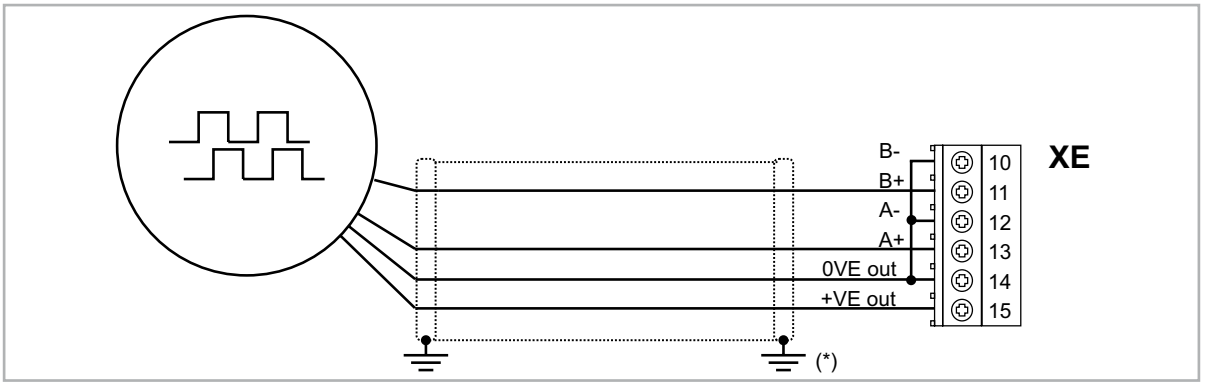

INCREMENTAL DIGITAL ENCODER (DE) SINGLE ENDED PNP O.C.

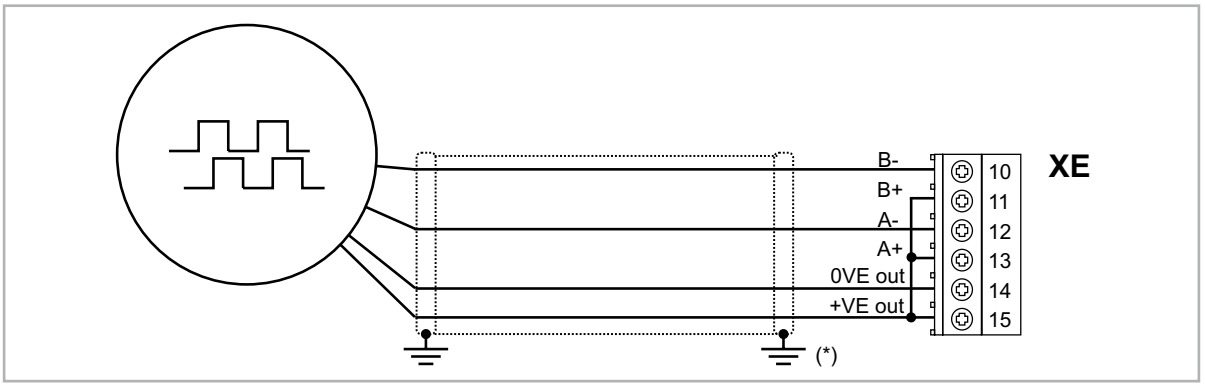

(*) Connection of shielding, see figure 7.2.4

EXP-SE-I1R1F2-ADL

Incremental Sinusoidal Encoder (SE).

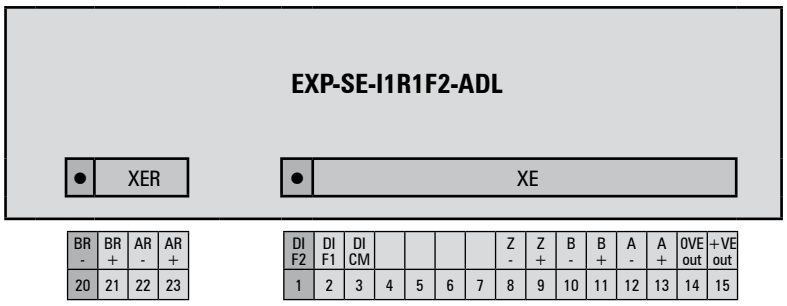

BR -	BR +	AR -	AR +
20	21	22	23

DI F2	DI F1	DI CM					Z -	Z +	B -	B +	A -	A +	0VE out	+VE out
1	2	3	4	5	6	7	8	9	10	11	12	13	14	15

Channels	A+ A-, B+ B-, Z+ Z-, differential. Management of loss of encoder signals
Max frequency	200 kHz (check the number of encoder impulses according to the maximum speed)
Number of impulses	min 128, max 16384 (default 1024)
Electrical interface	Channels A/B 0,8V ≤ Vpp ≥ 1,2V (typ. 1,0V) — Channel Z 0,2V ≤ Vpp ≥ 0,8V
Load capacity	8mA @ 1.0Vpp (Zin 120Ω)
Programmable internal power supply	min +5.2 V, max +6.0 V (default + 5.2 V) — Imax 150 mA. See table (1)
Cable length	max 50m

INCREMENTAL SINUSOIDAL ENCODER (SE)

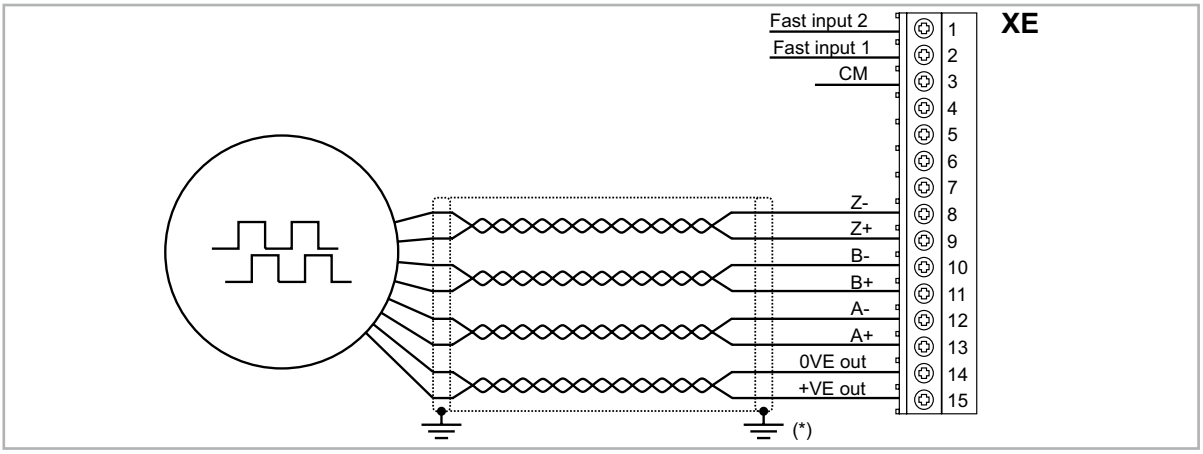

(*) Connection of shielding, see figure 7.2.4

EXP-SESC-I1R1F2-ADL

Incremental Sinusoidal Encoder + absolute SinCos (SESC). This is the default card supplied in drives to control permanent magnet synchronous motors (Brushless - SESC).

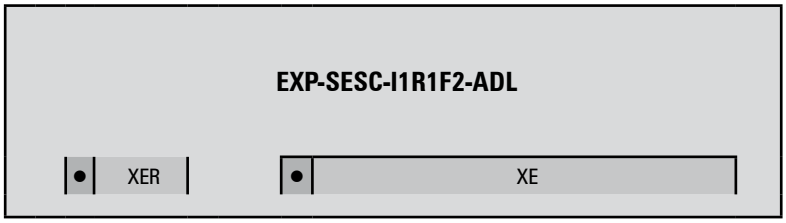

BR -	BR +	AR -	AR +
20	21	22	23

DI F2	DI F1	DI CM	COS -	COS +	SIN -	SIN +	Z -	Z +	B -	B +	A -	A +	0VE out	+VE out
1	2	3	4	5	6	7	8	9	10	11	12	13	14	15

Channels	A+ A-, B+ B-, Z+ Z-, Cos+ Cos-, Sin+ Sin-, differential Management of loss of encoder signals.
Max frequency	200 kHz (check the number of encoder impulses according to the maximum speed)
Number of impulses	min 128, max 16384 (default 1024)
Electrical interface	Channels A/B/Sin/Cos 0.6 V ≤ Vpp ≥ 1.2 V (typ. 1.0 V) — Channel Z* 0.2 V ≤ Vpp ≥ 0.8 V
Load capacity	Channels A/B/I 8 mA @ 1.0 Vpp (Zin 120Ω) Channels Sin/Cos 1 mA @ 1.0 Vpp (Zin 1kΩ)
Programmable internal power supply	min +5.2 V, max +6.0 V (default + 5.2 V) — Imax 150 mA. See table (1)
Cable length	max 50m

* Channel Z = I (Index mark)

INCREMENTAL SINUSOIDAL ENCODER + ABSOLUTE SINCOS (SESC)

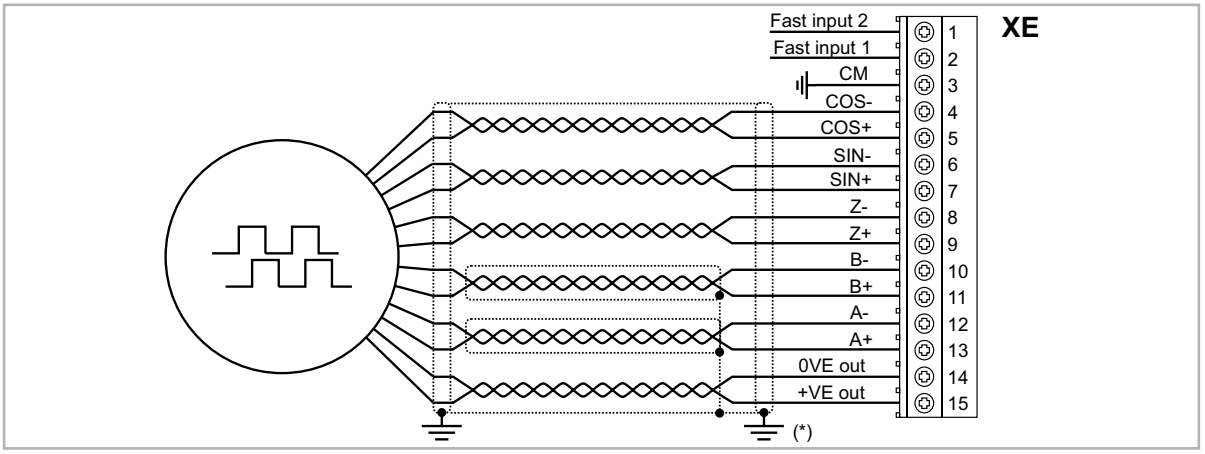

(*) Connection of shielding, see figure 7.2.4

EXP-SESC-I1R1-V-ADL

Incremental Sinusoidal Encoder + absolute SinCos (SESC).

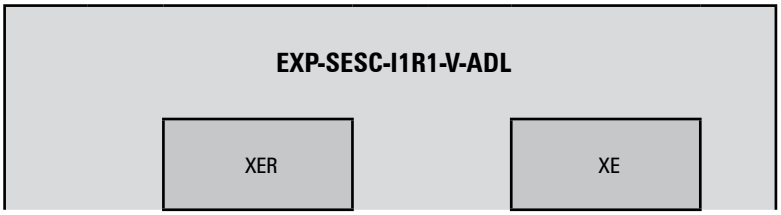

Channels	A+ A-, B+ B-, Z+ Z-, Cos+ Cos-, Sin+ Sin-, differential
	Management of loss of encoder signals.
Max frequency	200 kHz (check the number of encoder impulses according to the maximum speed)
Number of impulses	min 128, max 16384 (default 1024)
Electrical interface	Channels A/B/Sin/Cos 0.6 V ≤ Vpp ≥ 1.2 V (typ. 1.0 V) – Channel Z* 0.2 V ≤ Vpp ≥ 0.8 V
Load capacity	Channels A/B/I 8 mA @ 1.0 Vpp (Zin 120Ω)
	Channels Sin/Cos 1 mA @ 1.0 Vpp (Zin 1kΩ)
Programmable internal power supply	min +5.2 V, max +6.0 V (default + 5.2 V) – Imax 150 mA.
	See table (1)
Cable length	max 50m

* Channel Z = I (Index mark)

INCREMENTAL SINUSOIDAL ENCODER + ABSOLUTE SINCOS (SESC)

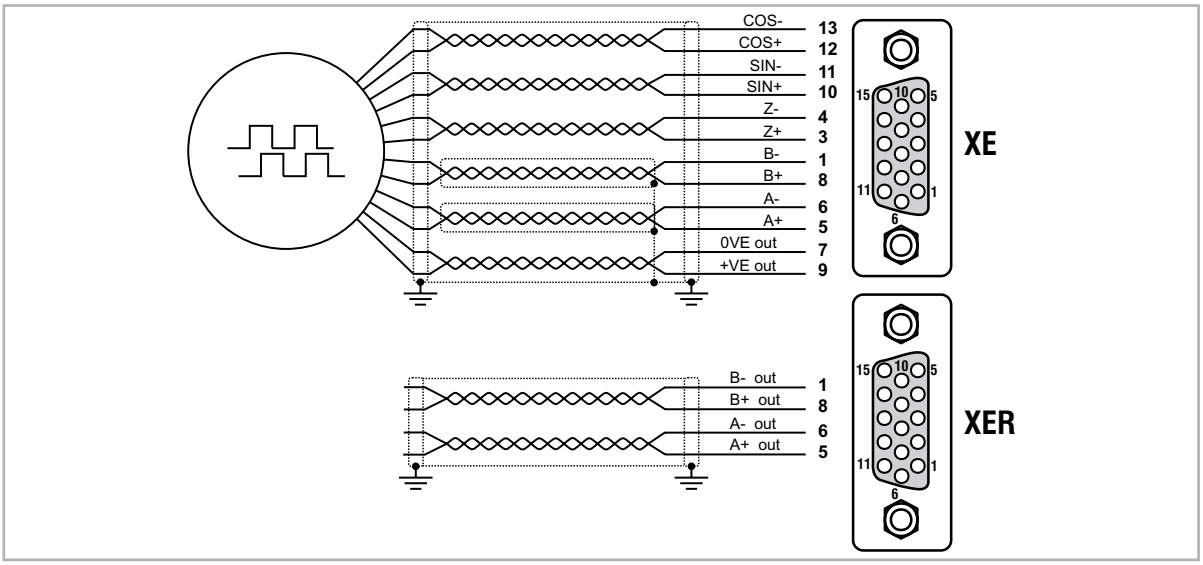

EXP-EN/SSI-I1R1F2-ADL

Incremental sinusoidal + Absolute EnDat/SSI (EN/SSI). This is the default card supplied in drives to control permanent magnet synchronous motors (Brushless - SESC).

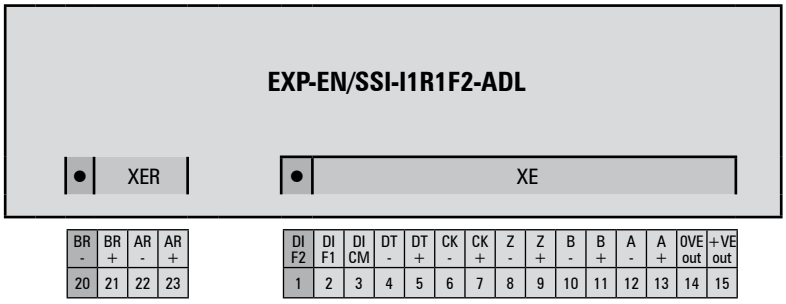

BR -	BR +	AR -	AR +
20	21	22	23

DI F2	DI F1	DI CM	DT -	DT +	CK -	CK +	Z -	Z +	B -	B +	A -	A +	0VE out	+VE out
1	2	3	4	5	6	7	8	9	10	11	12	13	14	15

Channels	A+ A-, B+ B-, differential Management of loss of encoder signals.
Max frequency	200 kHz (check the number of encoder impulses according to the maximum speed)
Number of impulses	min 128, max 16384 (automatic recognition at initialisation)
Electrical interface	0.6 V ≤ Vpp ≥ 1.2 V (typ. 1.0 V)
Load capacity	8 mA @ 1.0 Vpp (Zin 120Ω)
Programmable internal power supply	min +5.2 V, max +6.0 V (default + 5.2 V) − Imax 150 mA. See table (1)
Cable length	max 50m (see encoder cable length section)
Absolute channels	CK+ CK-, DT+ DT- differential, RS-485 Management of loss of encoder signals.
Interface	EnDat: 2.1/2.2 single/multi-turn (command set managed only compatible with 2.1) SSI: Standard Sick/Stegman single/multi-turn
Max frequency	EnDat: 1 MHz with delay compensation (not programmable) SSI: 400 KHz (not programmable)
Number of bits	EnDat: max 32 bit/turn* max 32bit/turn (automatic recognition at initialisation) SSI:13-25 bits (default 25)

Incremental sinusoidal + Absolute EnDat/SSI (EN/SSI)

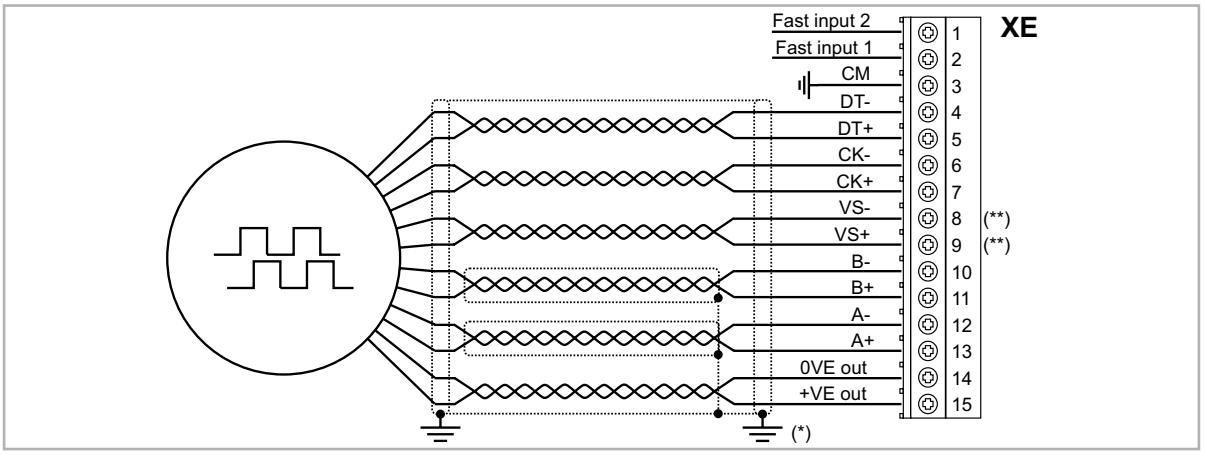

(*) Connection of shielding, see figure 7.2.4

(**) VS+ / VS- : optional (encoder supply feedback)

EXP-EN/SSI-I1R1F2-ADL (EnDat FULL DIGITAL)

Incremental sinusoidal + Absolute EnDat Full Digital. This is the default card supplied in drives to control permanent magnet synchronous motors (Brushless - SESC).

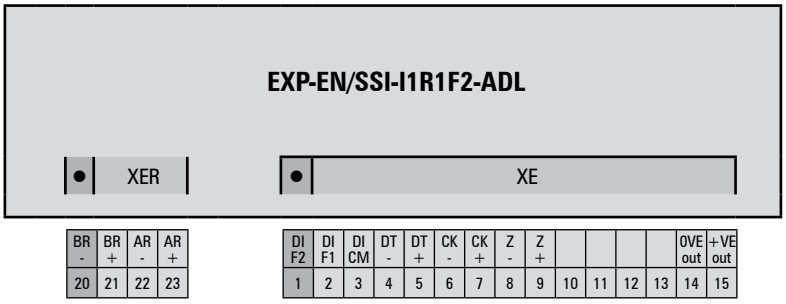

BR -	BR +	AR -	AR +
20	21	22	23

DI F2	DI F1	DI CM	DT -	DT +	CK -	CK +	Z -	Z +					0VE out	+VE out
1	2	3	4	5	6	7	8	9	10	11	12	13	14	15

Power supply	min +5.2 V, max +10 V (default + 5.2 V) – Imax 150 mA. Programmable internal power supply, see table (1)
Cable length	max 50m (see encoder cable length section)
Absolute channels	CK+ CK-, DT+ DT- differential, RS-485 Management of loss of encoder signals.
Interface	EnDat: 2.1/2.2 single/multi-turn (command set managed only compatible with 2.1)
Max frequency	EnDat: 1.5 MHz with delay compensation (not programmable)
Number of bits	EnDat: max 32 bit/turn* max 32bit/turn (automatic recognition at initialisation)

Incremental sinusoidal + Absolute EnDat Full Digital

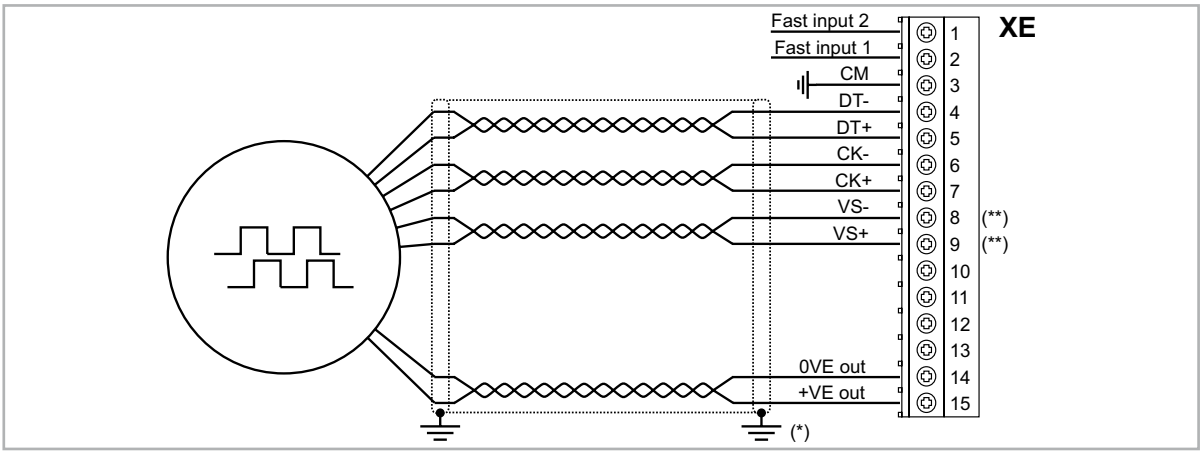

(*) Connection of shielding, see figure 7.2.4

(**) VS+ / VS- : optional (encoder supply feedback)

EXP-HIP-I1R1F2-ADL

Incremental Sinusoidal Encoder + Hiperface absolute (HIP)

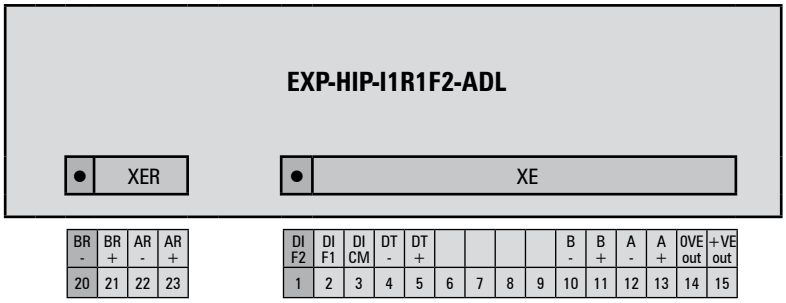

BR -	BR +	AR -	AR +
20	21	22	23

DI F2	DI F1	DI CM	DT -	DT +					B -	B +	A -	A +	0VE out	+VE out
1	2	3	4	5	6	7	8	9	10	11	12	13	14	15

Incremental channels	A+ A-, B+ B-, differential
	Management of loss of encoder signals.
Max frequency	200 kHz (check the number of encoder impulses according to the maximum speed)
Number of impulses	min 128, max 16384 (automatic recognition at initialisation)
Electrical interface	0,8V ≤ Vpp ≥ 1,2V (typ. 1,0V)
Load capacity	8mA @ 1.0Vpp (Zin 120Ω)
Programmable internal power supply	+7.0V / +8,0V / +12.0V
	See table (1)
Cable length	max 50m
Absolute channels	DT+ DT- differential, RS-485
	Management of loss of encoder signals.
Interface	Standard Sick/Stegman single/multi-turn
Max frequency	9600baud (not programmable)
Number of bits	max 32 bit/turn* max 32bit/turn (automatic recognition at initialisation)

INCREMENTAL SINUSOIDAL ENCODER + ABSOLUT HIPERFACE (HIP)

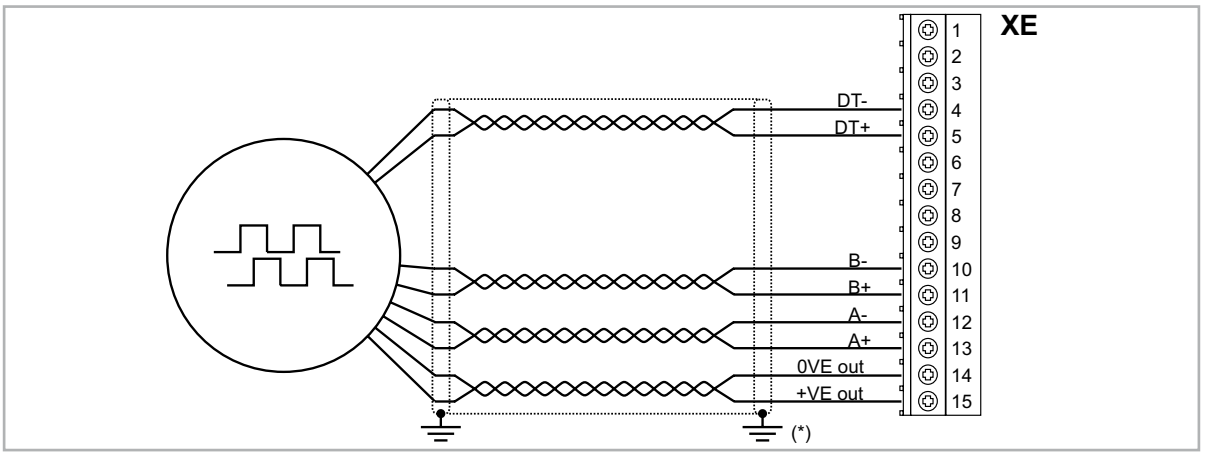

(*) Connection of shielding, see figure 7.2.4

Repeat Encoder RE (TTL/HTL line-driver)

Encoder expansion cards have an incremental encoder output with TTL/HTL Line Driver levels (according to the main encoder supply) to be used to repeat the servomotor feedback device. This function is performed via HW and an encoder output can be repeated with a programmable divider. The encoder output signals are available on the XER connector:

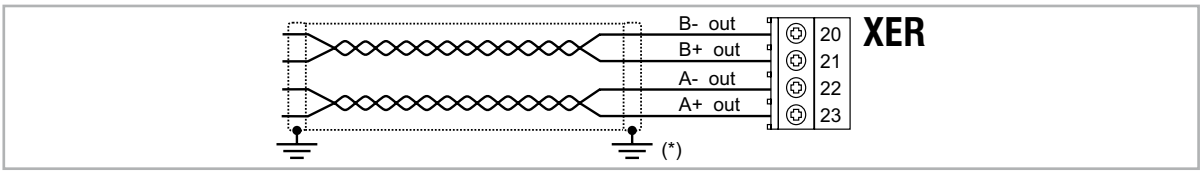

(*) Connection of shielding, see figure 7.2.4

Channels	A+ A-, B+ B-, differential line drivers, optoisolated.
Max frequency	200 kHz
Number of impulses	1/1-1/2-1/4-1/8 repeat (default 1/1)
Electrical interface	TTL (ref. GND) Ulow ≤ 0.5 V Uhigh ≥ 2.5 V HTL Ulow ≤ 3.0 V Uhigh ≥ Venc - 3.0 V (only with DE encoder)
Load capacity	TTL 20mA @ 5,5V (Zin 120Ω) for each channel HTL 50mA max. for each channel .
Power supply	Venc (encoder signals are repeated on the same value of the primary encoder), the supply value for the repeat is always that set for the primary encoder.
Cable length	max 50m

(1) The internal power supply of the encoder can be selected from the keypad (ENCODER CONFIG menu, parameter **Encoder supply** (PAR 2102) to balance the loss of voltage due to the length of the encoder cable and load current, minimum step 0.1 V

Internal power supply of the encoder			
Encoder option type	**Def**	**Min**	**Max**
Enc 1	5.2 V	5.2 V	20.0 V
Enc 2	5.2 V	5.2 V	6.0 V
Enc 3	5.2 V	5.2 V	6.0 V
Enc 4	5.2 V	5.2 V	10.0 V
Enc 5	8.0 V	7.0 V	12.0 V

A.4 - Brake monitoring system (A3 Amendment)

A.4.1 Introduction

The brake monitoring function in the ADL series of products: ADL300 enables implementation of the automatic brake monitoring function as required by EN81-1 A.3 §9.11.3.

Two functional elements are required to implement the brake monitoring function:
1. Management of the **Brake fault** alarm
2. Resetting of the **Brake fault** alarm

The basic wiring diagram for implementing this function is shown in Figure 1.

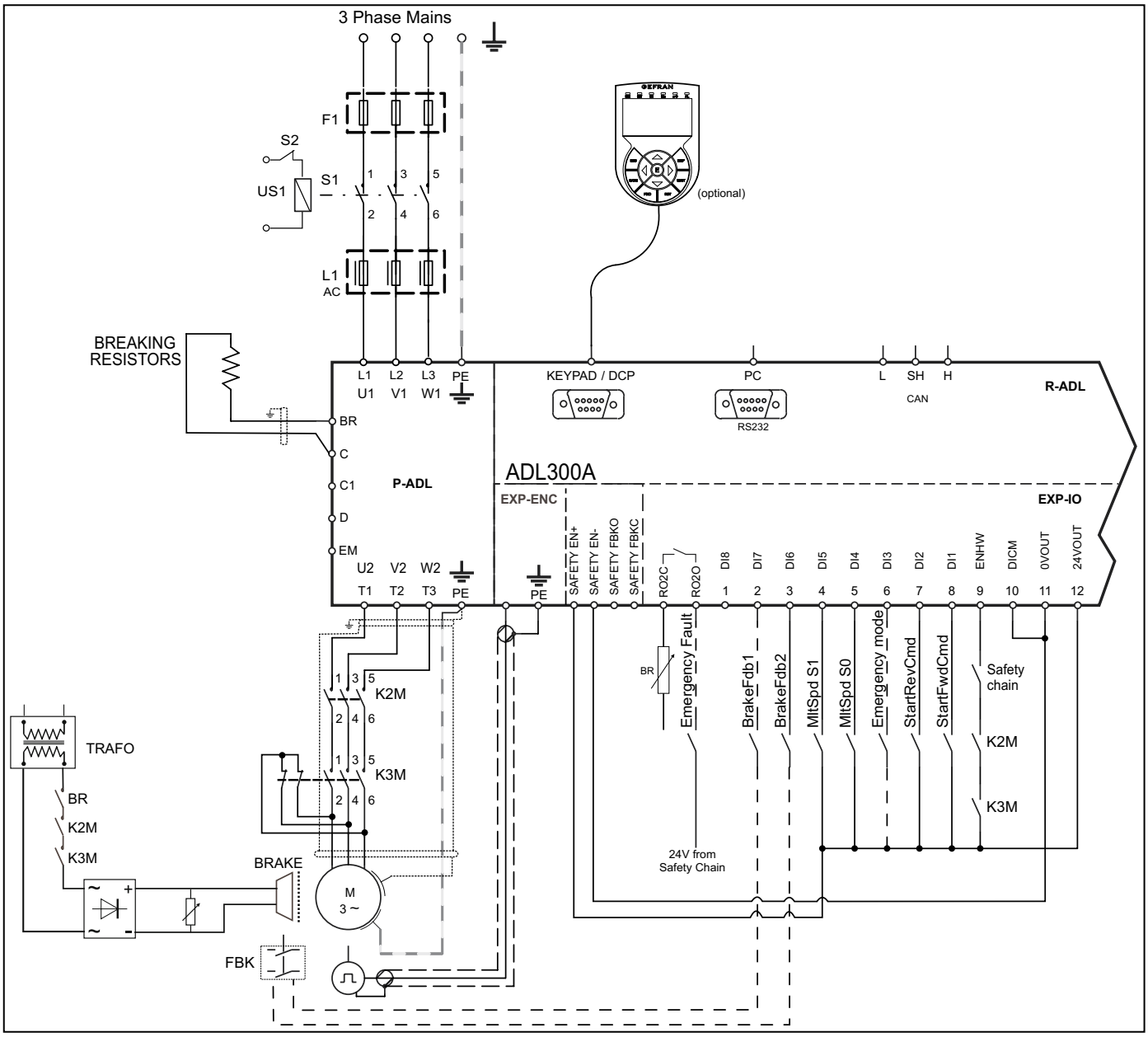

Figure 1 : ADL connection diagram for amendment A3.

This shows that :

A) The ADL controls brake activation/deactivation via relay BR

B) Both brake feedback signals are sent to the ADL inputs

C) The ADL signals any malfunctions (including brake malfunctions) to the system control unit via internal relay RO1.

D) The system control unit blocks the system brake in safety by deactivating contactors K2 and K3.

According to an alternative arrangement, the ADL closes/opens contactors K2 and K3 but the power supply to the coils and to the ADL commands comes from the control unit.

The purpose of the brake fault alarm is to check whether the states of the two feedback signals from the brake are consistent and, in case of doubt, to include a function whereby the ADL drive stops the system. The procedure for including the alarm is described below

A.4.2 Configuration of the brake fault alarm

- **Activation of the brake fault alarm function.**

The installer must have previously located the necessary digital inputs of the ADL drive and connected the corresponding wires to the feedback signals on these inputs. Note that depending on the type of wiring arrangement, the brake feedback signals are normally asserted (brake closed – digital input to 1) or normally not asserted (brake closed – digital input to 0).
The brake fault alarm function envisages signals that are normally asserted. If the wiring is functionally inverted, simply negate the corresponding digital inputs in the ADL configuration.

To configure the brake fault alarm function, proceed as follows:

1. In the 5.7 INPUTS/OUTPUTS menu , change the setting of parameter 11252 **Brake Fbk A3 Sel** (default **Null**) and select the digital input corresponding to the second brake feedback signal If **Brake Fbk A3 Sel** is set to a value other than **Null**, the brake fault alarm function is automatically enabled.
2. Next select the digital input corresponding to the first brake feedback signal in parameter 11236 **Brake Fbk Sel**.

The brake fault function is enabled. **The installer in charge of the system must test the function each time it is activated or modified, following the brake fault test procedure.**

- **Resetting the brake fault alarm**

1. Open the 5.9 LIFT ALARM menu and check that the **Brake Alarm** is on.
2. In the 5.9 LIFT ALARM menu, select parameter 11268 **Reset Brake Alarm** (default 0).
3. The system asks for a code, enter release code 5313.
4. Check again to see whether the **Brake Alarm** has been reset.

- **Disabling the brake fault alarm**

1. In the 5.7 INPUTS/OUTPUTS menu, change the setting of parameter 11252 **Brake Fbk A3 Sel** to **Null** The brake fault alarm function is disabled.
2. If the new configuration does not manage any brake feedback signals, change the setting of parameter 11236 **Brake Fbk Sel** to [3708] **Brake cont mon** .

- **Brake fault alarm test procedure**

Proceed as follows:

1. Disconnect the wire connecting the first brake feedback signal to the relative digital input.
2. Try re-starting from the floor with the feedback signal disconnected. If the lift car does not move (correct behaviour), proceed to step 3. If the lift car moves, the alarm is not working properly. Check the various parts of the system.
3. If the brake fault alarm is connected, reset it and proceed to step 4. If the alarm is not connection, re-check the various parts of the system.
4. Repeat steps 1, 2 and 3, disconnecting the second brake feedback signal from the corresponding input.

If the procedure is successful, the brake fault alarm will function properly.

A.4.3 Maintenance of the brake fault alarm function

The installer must repeat the brake fault alarm test procedure during periodical inspections and whenever messages concerning the brake unit are displayed.

The installer must check the alarm log each time for any faults

A.4.4 Troubleshooting

Fault	Possible cause	Solution
Motor does not run, the brake fault alarm is triggered continuously	Feedback signals disconnected/incorrectly connected	Re-check brake feedback signal wiring and electric levels
	Brake feedback not configured correctly	Check PAR 11236 **Brake Fbk Sel,** PAR 11252 **Brake Fbk Sel A3** configuration. Check correct signal operation (electric levels) and invert digital inputs if necessary
	Monitoring time too short in relation to system response times	Set a longer PAR 11206 **Brake Hold Off time**
The motor runs even with the feedback signals disconnected	The brake fault alarm is not connected.	Check the setting of PAR 11252 **Brake Fbk Sel A3**.
	Incorrect PAR 11252 **Brake Fbk Sel A3** / PAR 11236 **Brake Fbk Sel** setting.	PAR 11252 **Brake Fbk Sel A3** and PAR 11236 **Brake Fbk Sel** must not be set to **Null** or **Brake Cont Mon**.

Gefran worldwide

GEFRAN DEUTSCHLAND GMBH
Philipp-Reis-Straße 9a
D-63500 Seligenstadt
Ph. +49 (0) 61828090
Fax +49 (0) 6182809222
vertrieb@gefran.de

SIEI AREG - GERMANY
Gottlieb-Daimler Strasse 17/3
D-74385 - Pleidelsheim
Ph. +49 (0) 7144 897360
Fax +49 (0) 7144 8973697
info@sieiareg.de

SENSORMATE AG
Steigweg 8,
CH-8355 Aadorf, Switzerland
Ph. +41(0)52-2421818
Fax +41(0)52-3661884
http://www.sensormate.ch

GEFRAN FRANCE SA
PARC TECHNOLAND
Bâtiment K - ZI Champ Dolin
3 Allée des Abruzzes
69800 Saint-Priest
Ph. +33 (0) 478770300
Fax +33 (0) 478770320
commercial@gefran.fr

GEFRAN BENELUX NV
ENA 23 Zone 3, nr. 3910
Lammerdries-Zuid 14A
B-2250 OLEN
Ph. +32 (0) 14248181
Fax +32 (0) 14248180
info@gefran.be

GEFRAN UK LTD
Clarendon Court
Winwick Quay
Warrington
WA2 8QP
Ph. +44 (0) 8452 604555
Fax +44 (0) 8452 604556
sales@gefran.co.uk

GEFRAN MIDDLE EAST ELEKTRIK VE ELEKTRONIK SAN. VE TIC. LTD. STI
Yesilkoy Mah. Ataturk
Cad. No: 12/1 B1 Blok K:12
D: 389 Bakirkoy /Istanbul
TURKIYE
Ph. +90212 465 91 21
Fax +90212 465 91 22

GEFRAN SIEI
Drives Technology Co., Ltd
No. 1285, Beihe Road, Jiading
District, Shanghai, China 201807
Ph. +86 21 69169898
Fax +86 21 69169333
info@gefran.com.cn

GEFRAN SIEI - ASIA
31 Ubi Road 1
#02-07, Aztech Building,
Singapore 408694
Ph. +65 6 8418300
Fax +65 6 7428300
info@gefran.com.sg

GEFRAN INDIA
Survey No. 191/A/1,
Chinchwad Station Road,
Chinchwad,
Pune-411033, Maharashtra
Ph. +91 20 6614 6500
Fax +91 20 6614 6501
gefran.india@gefran.in

GEFRAN INC.
8 Lowell Avenue
WINCHESTER - MA 01890
Toll Free 1-888-888-4474
Fax +1 (781) 7291468
info.us@gefran.com

GEFRAN BRASIL
ELETROELETRôNICA
Avenida Dr. Altino Arantes,
377 Vila Clementino
04042-032 SÃO PAULO - SP
Ph. +55 (0) 1155851133
Fax +55 (0) 1132974012
comercial@gefran.com.br

GEFRAN

GEFRAN S.p.A.
Via Sebina 74
25050 Provaglio d'Iseo (BS) ITALY
Ph. +39 030 98881
Fax +39 030 9839063
info@gefran.com
www.gefran.com

Drive & Motion Control Unit
Via Carducci, 24
21040 Gerenzano (VA) ITALY
Ph. +39 02 967601
Fax +39 02 9682653
infomotion@gefran.com

Technical Assistance:
technohelp@gefran.com

Customer Service:
motioncustomer@gefran.com
Ph. +39 02 96760500
Fax +39 02 96760278

Manuale ADL300 QS -EN
Rev. 1.2 - 6-11-2017

1S9QSEN